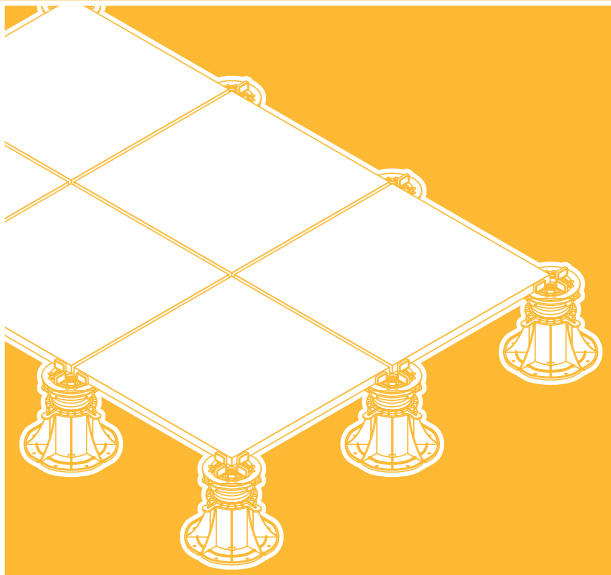

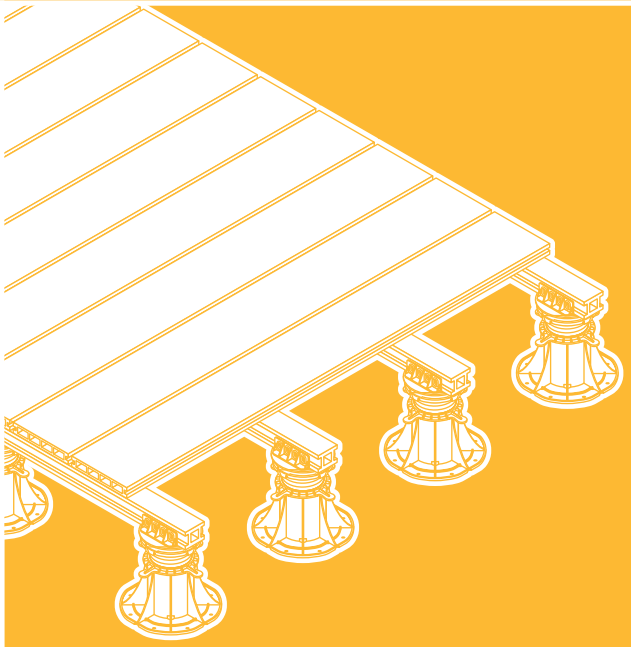

CATALOG 2023

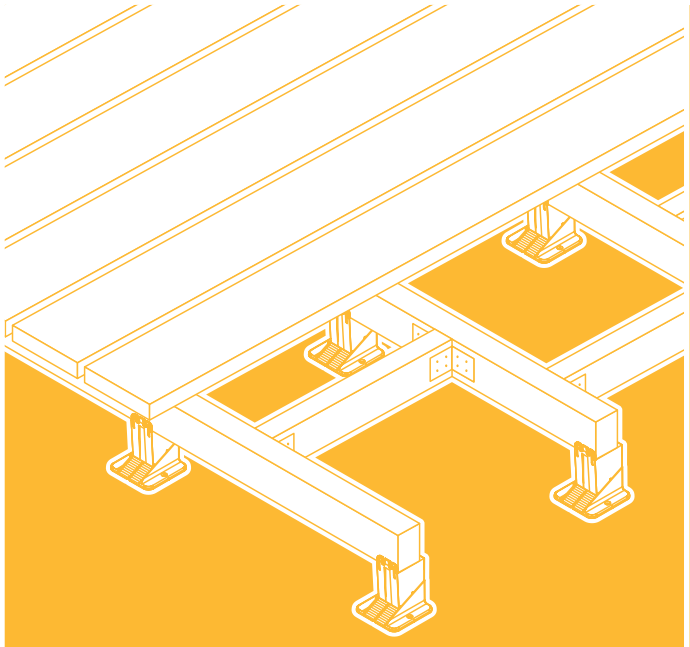

PEDESTALS RAISED OUTDOOR FLOORS

LAWN EDGES

WOODEN TERRACES

FOR INTERNAL USE ONLY

enviro lift

v.2023.3.6.EN.MM

List of contents

List of contents 3

Pedestal raised floor terraces 4

What is pedestals raised outdoor floors? 5
Advantages of the pedestals raised floor terraces 6
Pedestals raised floor with tiles 8
Pedestal raised floor decking 9
Our terrace solutions 10

Paver spacers SUPPORT PADS 14

Where to use 15
Cross paver spacer 2 mm 16
Paver spacer 8 mm 18
Paver spacers 10 and 15 mm 19
Paver spacer 16 mm 21
Accesories for SUPPORT PADS 22

SPIRAL series 24

Where to use 25
Pedestal design 26
Advantages 27
SPIRAL pedestals 28
SPIRAL series accessories 34

STANDARD series 36

Where to use 37
Pedestal design 38
Advantages 39
STANDARD pedestals 40
STANDARD Series accessories 44
Joist supports for anchor foundation 47

MAX series 50

Where to use 51
Pedestal design 52
Advantages 53
MAX series pedestals 54
MAX Series accessories 58

ALU Series 62

Where to use 63
Pedestal design 64
Advantages 65
ALU series pedestals 66

Accessories for pedestals 72

Side finishing closure plate 73
Up to wall clip 74
Drill driver bit tool 75
Rubber shim SH 76
SBR rubber pad 77
Self leveling head 78
Key from the top 79

RAPTOR series 80

Application 81
Pedestal design 82
Advantages 83
RAPTOR pedestals 84
RAPTOR Series accessories 89

Lawn edging 90

Where to use 91
Lawn edging 92
Lawn edges accessories 93

Terraces installation 94

Practical tips 103
Pedestals usage 106
What else we can do for you? 110

About us 111

Our projects 112
Contact 115



CERTIFIED PRODUCTS



PEDESTAL

RAISED FLOOR TERRACES

External terraces - **tiles and decking**



Pedestal raised floor terraces

What is **pedestals raised outdoor floors**?

Pedestals raised outdoor floors

Pedestals raised floor terraces unlike traditional terraces in which layers are glued with adhesive to the substrate are laid on the pedestals whose aim is to create a distance between the ground of the terrace and the final terrace surface.

Pedestal raised floor terraces can be made with tiles e.g. concrete, ceramic and wood and WPC decking

DD Group products allow you to get terrace height from 2 to 950 mm.



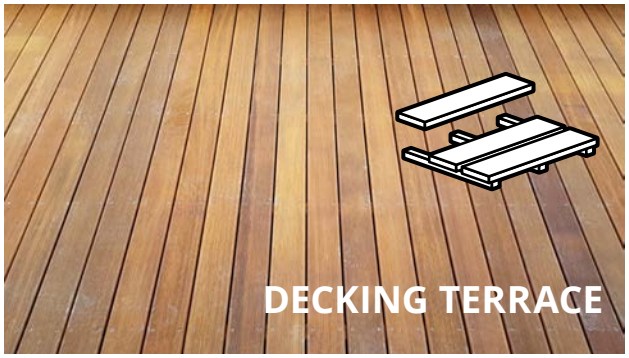

Scheme of pedestals raised floor terrace

Pedestal raised floor terrace is supported with pedestals and it is not fixed to the ground.

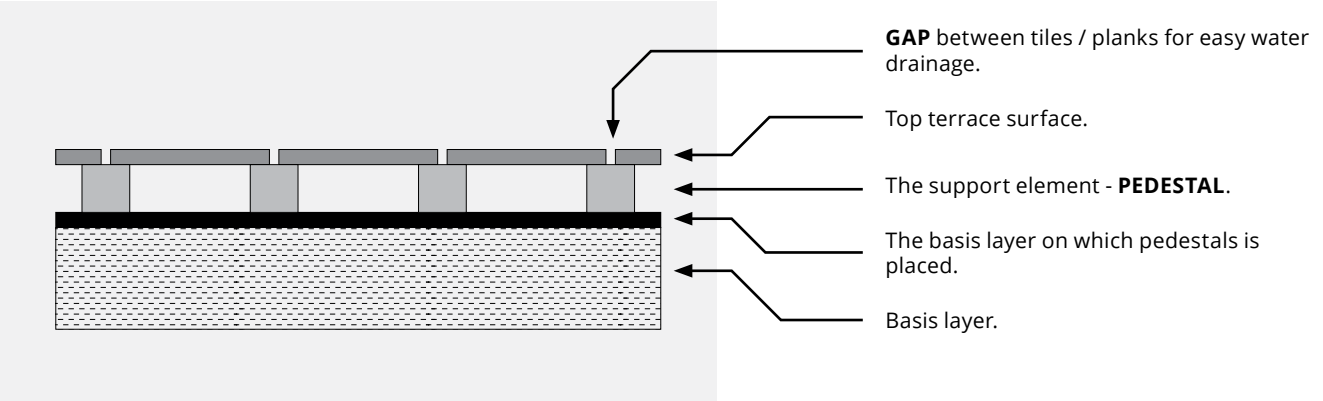

Terrace on the basis with a slope.

Pedestal raised floor allows to create leveled terrace surface even on the sloped subsurface.

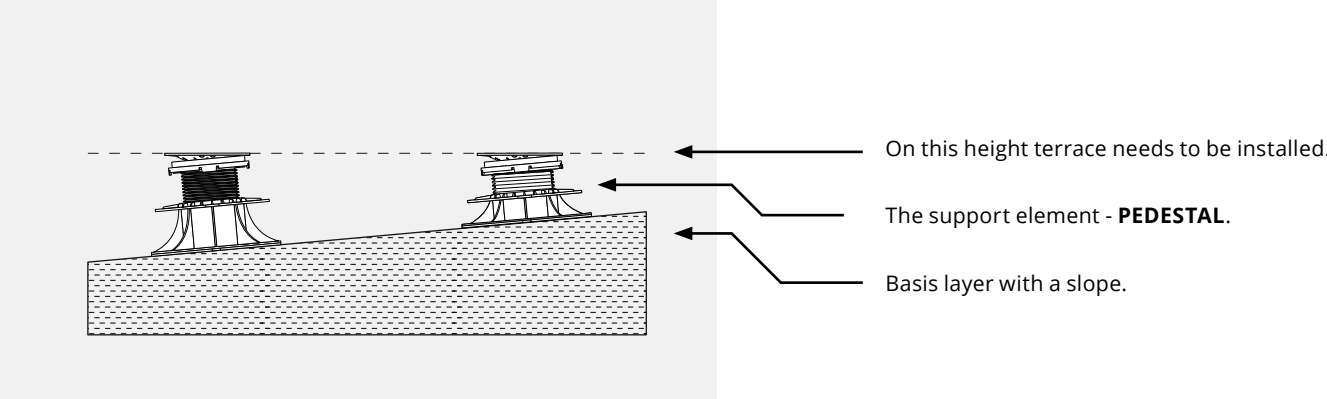

Advantages of the pedestals raised floor terraces

WRONG



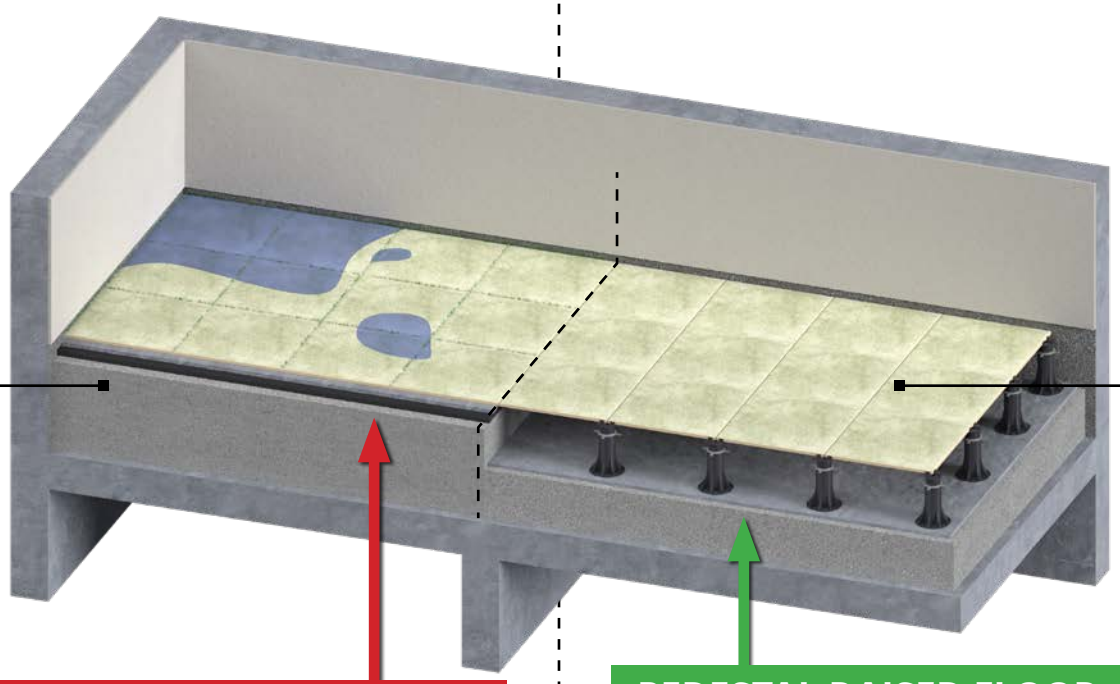

TRADITIONAL TERRACE

PEDESTAL RAISED FLOOR TERRACE

GOOD

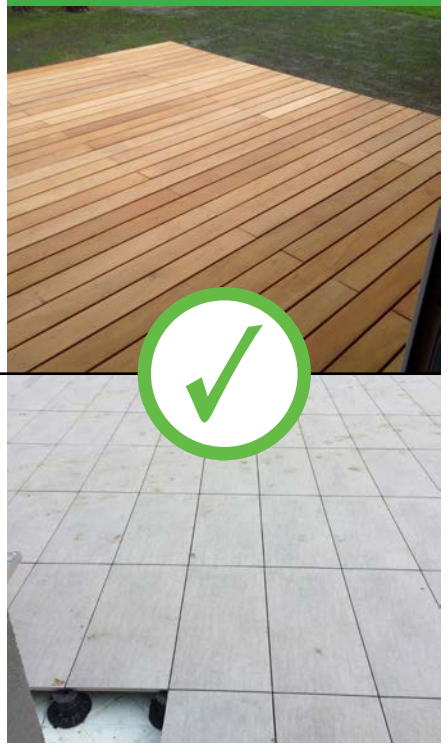

Water isolation is the **biggest problem** in modern construction and it is failure is a cause of about **80% building damages**.

- A large number of tools and materials necessary to make it.
- Water contributes to the weakening of the floor and results in a loosening of tiles.
- Traditional terrace solution is covering water membrane damages which are cause of serious damage of the building construction.
- Continuous moisture causes an unattractive appearance and progressive surface destruction.
- Any repair can lead to even bigger damages and losses.
- There is no access to the water isolation membrane.

Adjustable pedestas for external raised floors make it easier to build and it is easy terrace to maintain without damaging the water membrane.

+ A minimum number of tools and materials.
+ Water does not arise on the surface, freely flows into the outflows.
+ Pedestals raised floor terraces are light for the structure.
+ Simple substrate maintenance and no water isolation damage.
+ Adjusting the height and level of the floor.
+ Ecological product.
+ Resistance to low and high temperatures and UV radiation.
+ The ability to adapt to any surface.

Advantages of the pedestals raised floor terraces

1

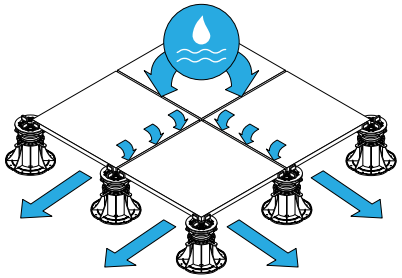

Fast water drainage

Gaps between tiles or planks allow water free and fast outflow from the surface of the terrace floor. Water does not arise on the surface.

2

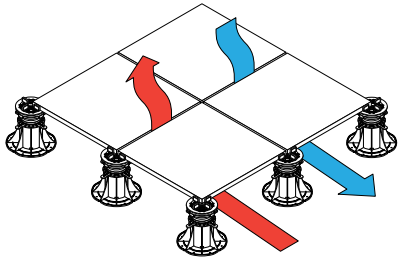

Additional thermal insulation

The adjustable height pedestals system provides better thermal insulation. Aerial emptiness between top terrace surface and insulation causes constant air circulation which increases the life span of water membrane isolation.

3

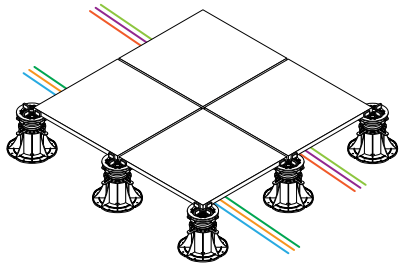

Any kind of installations can be places under the terrace

Pedestal raised floor terrace enable installation under the floor. All cables can be placed freely under it and have access to them at any time.

4

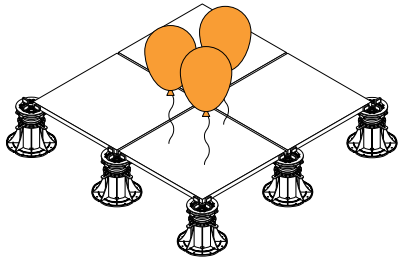

Lower weight

The terrace floor does not require many heavy adhesive layers. Floors raised on adjustable height pedestals are lightweight.

5

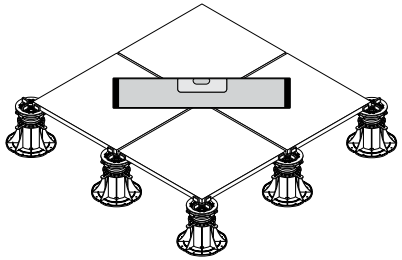

Even surface

Using adjustable pedestals, leveling the terrace floor is extremely simple. The design is stable and perfect levelled.

6

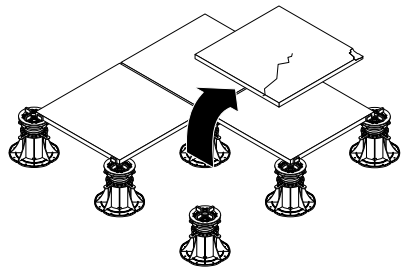

Fast replacement of damaged terrace material

The method of assembly enables easy and quick replacement of a damaged tiles or planks without having to perform advanced construction works.

Pedestal raised floor terraces

Pedestals raised floor **with tiles**

Pedestals for tiles

Terrace tiles are laying on the pedestals. The floor of the terrace can be raised to any height.

Tile terraces can be used with ALU series, SUPPORT PADS Series, STANDARD Series, SPIRAL Series, MAX Series.

- no glues
- no adhesives
- without additional drying time

Pedestals do not need to be fixed with a bottom surface.

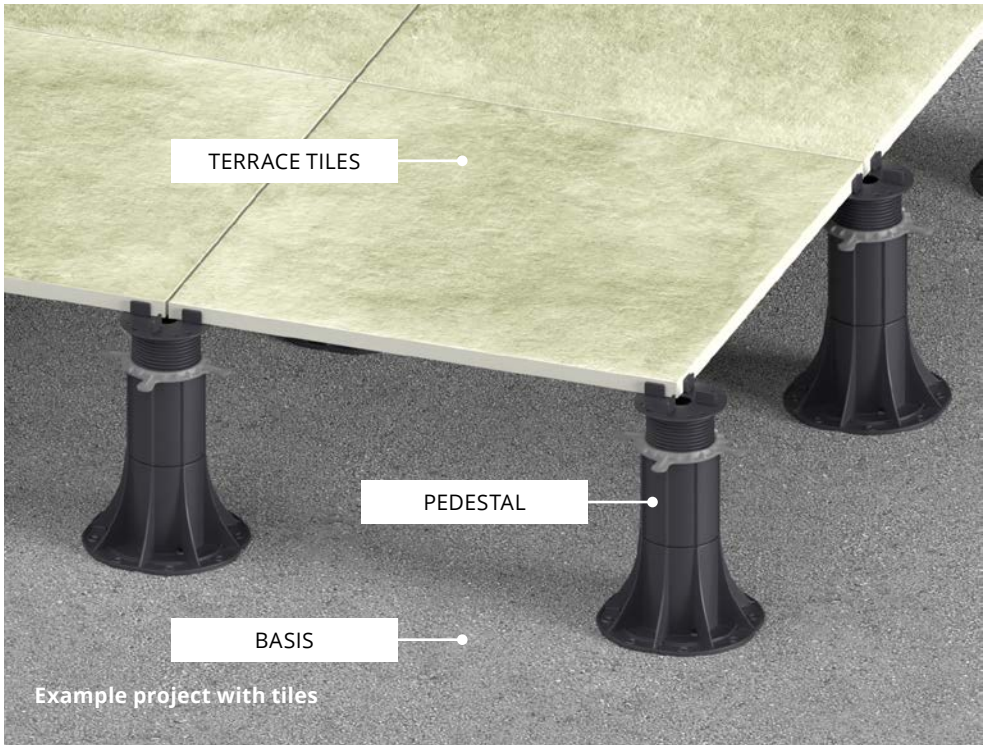

Example project with tiles

TILES
ceramic,
stone,
concrete



THESE PEDESTALS YOU CAN USE WITH TILES



SUPPORT PADS Series

SPIRAL Series

STANDARD Series

MAX Series

ALU Series



Pedestal raised floor **decking**

Decking pedestal

The final surface of the terrace are planks. Planks are screwed to the joists. Joists are laying on the pedestals. Terrace can be raised on any height.

Decking terraces can be used with pedestals STANDARD Series, RAPTOR Series, SPIRAL Series, MAX Series.

Adjustable pedestals allows for easy installation of terrace joists made of wood, WPC, aluminium.

Pedestals do not need to be fixed to bottom surface.

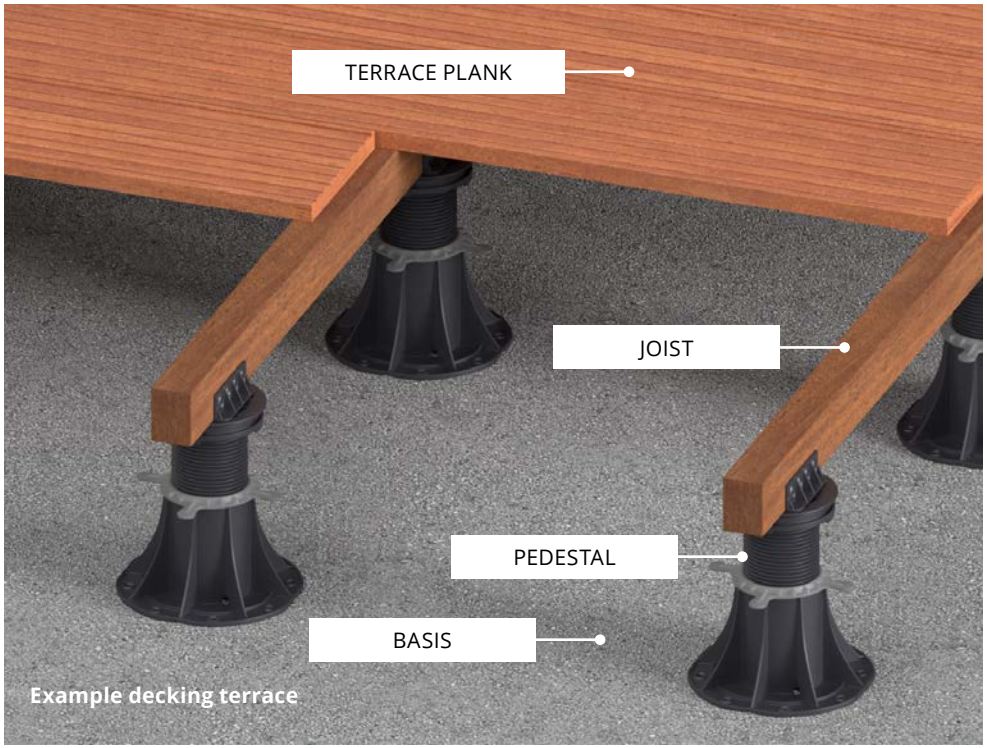

Example decking terrace

PLANKS
wooden,
WPC

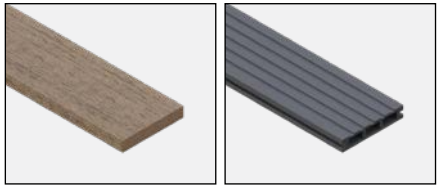

JOISTS
wooden,
aluminium,
WPC

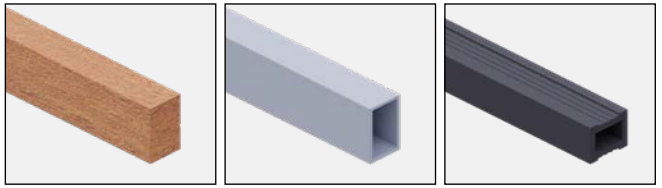

ON THESE PEDESTALS YOU CAN INSTALL DECKING JOISTS



SPIRAL
Series

STANDARD
Series

MAX
Series

RAPTOR
Series



Pedestal raised floor terraces

Our terrace **solutions**

A wide range of heights

Different heights and a different design of individual series allow them to adapt them to various terrace solutions.

Adjustable pedestals allows you to get terrace height from 2 to 950mm.

HEIGHT
from **2** to **950** mm



SUPPORT PADS

from **2** mm
to **48** mm

FOR TILES

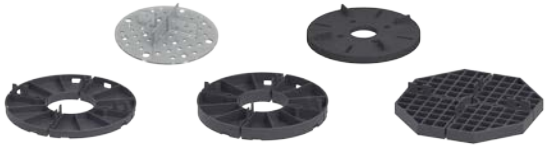

SPIRAL

from **10** mm
to **210** mm

FOR TILES

FOR DECKING JOISTS



STANDARD

from **30** mm
to **420** mm

FOR TILES

FOR DECKING JOISTS



MAX

from **45** mm
to **950** mm

FOR TILES

FOR DECKING JOISTS



RAPTOR

from **15** mm
to **245** mm

FOR DECKING JOISTS



ALU

from **40** mm
to **200** mm

FOR TILES



Pedestal raised floor terraces

Our terrace **solutions**

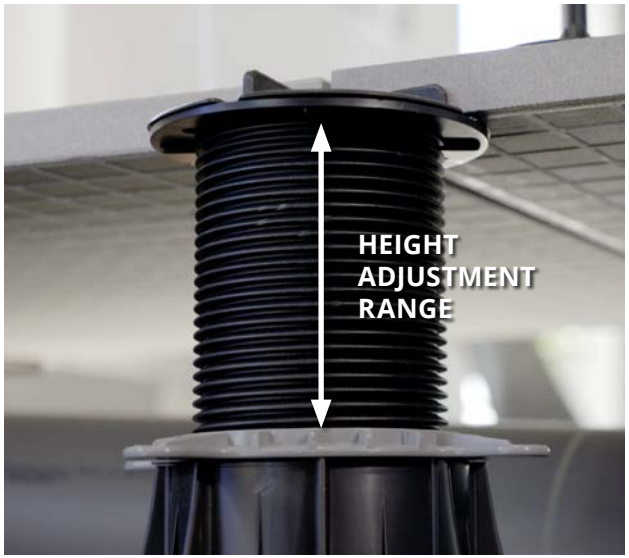

Types of height adjustment

- **Smooth adjustment**
  A smooth adjustment of the height of the pedestals allows you to accurately reach terrace height without unnecessary slots and loose places. The smooth height adjustment function has a Standard, Max and Alu series pedestals.
- **Stepped height adjustment**
  The Spiral and Raptor series have a stepped height adjustment with accuracy approximately 1 mm.
- **Stackable**
  Paver spacers SUPPORT PADS has a fixed height. With their modular design they can be stacked. Raising height with stacking by placing one on the another 2-3 spacers.

Smooth adjustment

With using DD GROUP pedestals it is possible to make external raised terrace floors with height from **2** to **950** mm. Each Series has their unique height range.

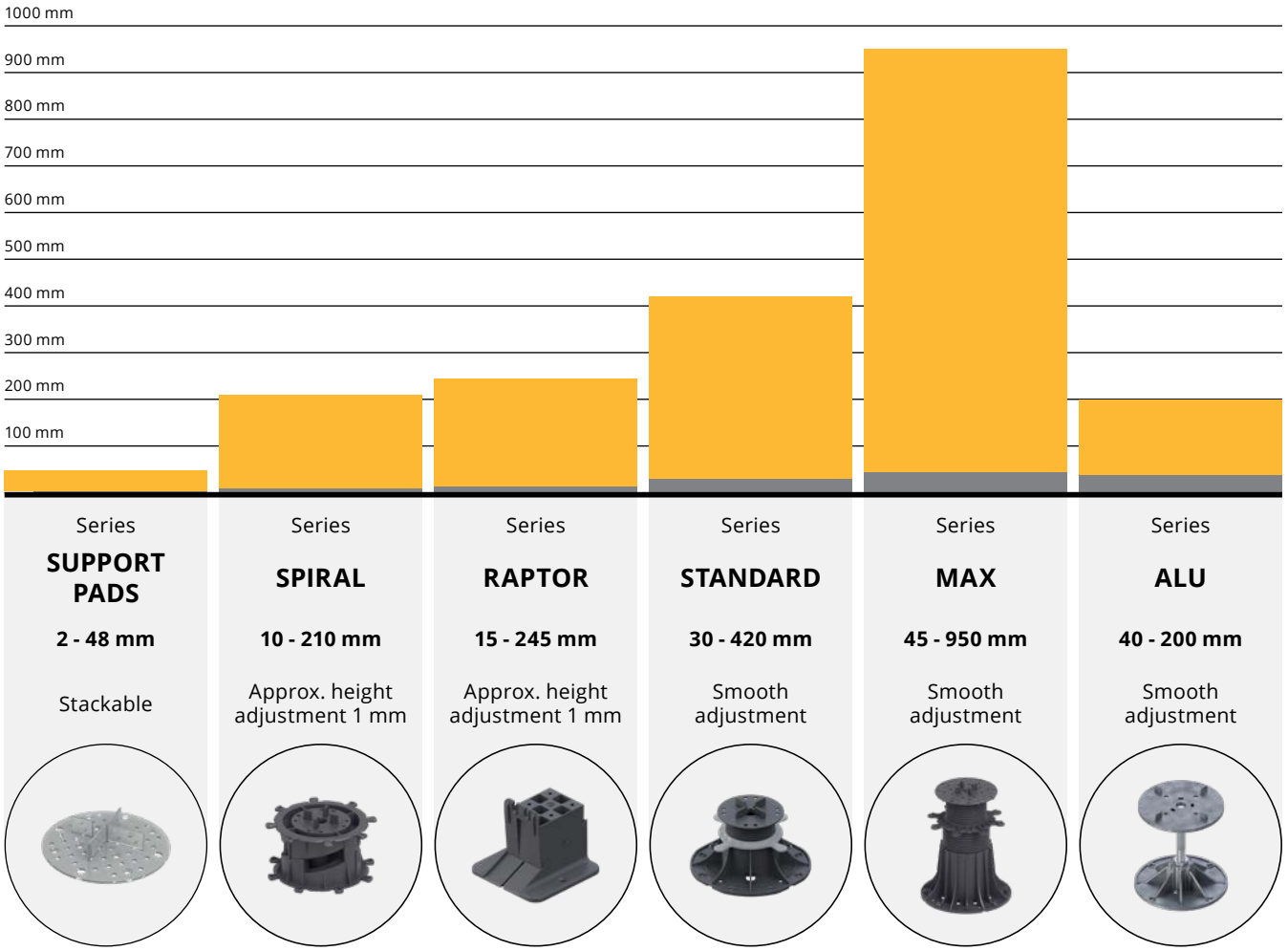

Pedestal raised floor terraces

Our terrace **solutions**

If terrace has a slope

Using raised floor pedestals system on a sloped basis allows to create leveled top terrace surface. Water will drainage through the joints between tiles or planks. This solution is extremely useful on roofing or balconies. Installation of the leveled terrace is possible with using a self leveling head or bottom base slope corrector. Self leveling head automatically adjust pedestal head level to the terrace. Self leveling head is available to use with SPIRAL, STANDARD, MAX Series. Bottom base slope corrector is possible to use with MAX, RAPTOR Series.

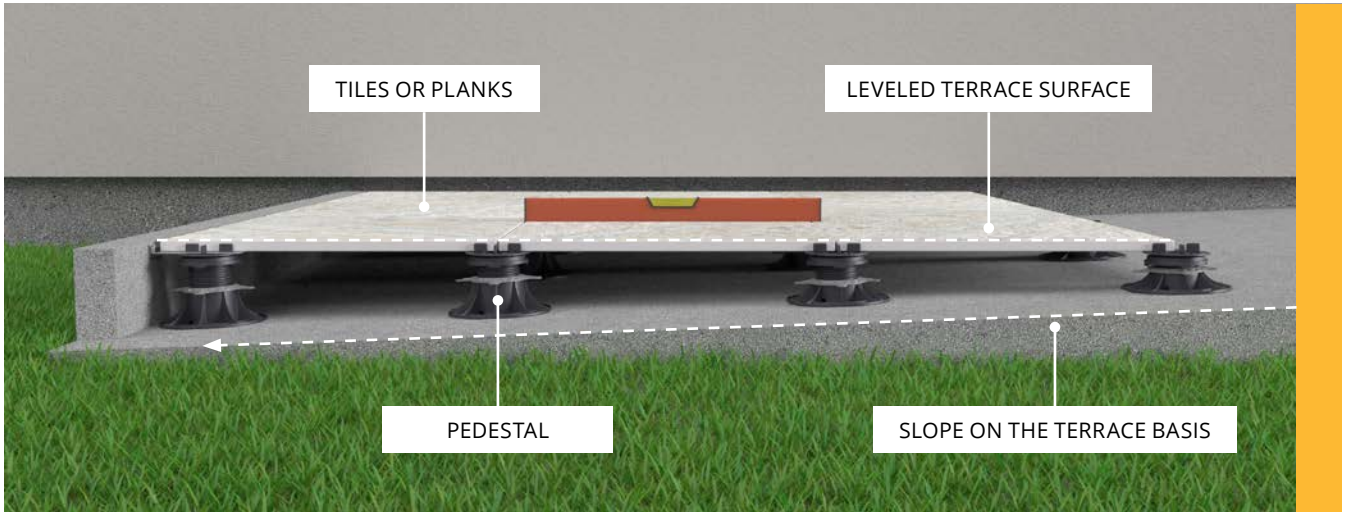

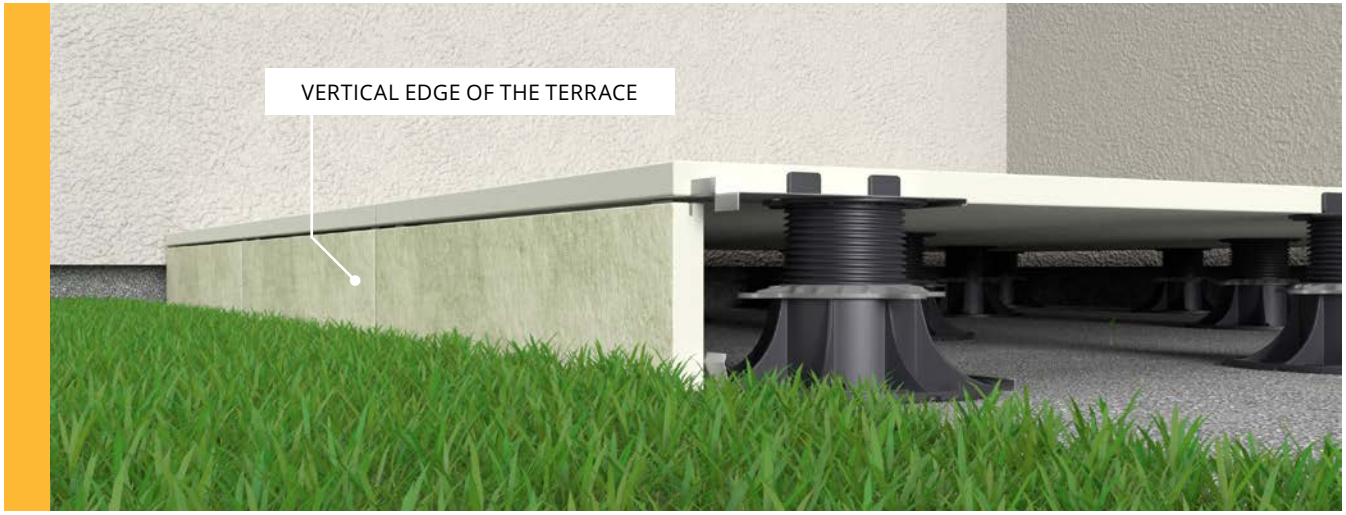

Exposed sides of the terrace ...

Vertical edges

Raised floor pedestal terraces has a possibility to cover vertical edges of the terrace. This can be done for tiles and also for wood or WPC planks terrace. With tile terrace just need to use a with a vertical edge mounting clips. With this solution we achieve estetic vertical edges finishing.

Pedestal raised floor terraces

Our terrace **solutions**

Where pedestals raised floor terrace can be used?

Pedestals raised floor terraces can be use in every kind of exterior terrace with tiles or decking. Terrace can be made of concrete, ceramic tiles or wood & WPC planks. Terrace can be located on a roof, balconie and groundfloor.



1



Outside the building

Outdoor terrace can be depending on the series of pedestals used both on hard substrates such as concrete, concrete pavers and on hardened sand or gravel. Wide application gives the opportunity to build substrates on terraces, balconies, etc.

2



Inside the building

The pedestal raised floor installed inside buildings allows you to conduct and constant access to all electrical, insulating or sewage installations.

3

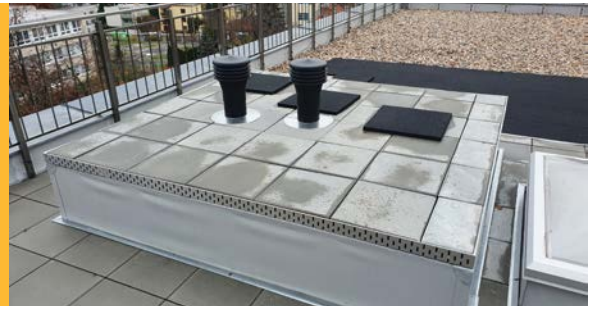

On the roof

The ability to raise the terrace on the roofs of buildings provides protection of antihydrate isolation. The advantage of this solution is a lower load, which is extremely important at the insulating structure of the roofs.

4



On the balcony

Leveled terrace on the ground with a slope for water drain underneath.

5



Fountain

Level terrace surface with a slope for water drainage underneath



enviro lift

PAVER SPACERS

SUPPORT PADS

They seperate tiles from the basis underneath
and create a spacer joints between them.

Paver spacers **SUPPORT PADS**

Where to use

Terraces with a low height

Paver spacer SUPPORT PADS are designed to install terrace tiles. The series allows to create a raised floor terraces with a minimum heights. Paver spacers has a fixed height. With a 8 mm model and higher they can be stacked. The modular design allows to cut them into pieces for placing them along the wall or in the corners.

Stackable

Stack possibility (not applicable for 2 mm paver spacer)

Durable

Paver spavers will stand heavy loads

Modular

The ability to adapt to the edge of the terrace

Different materials

Invisible transparent spacer 2 mm or sound proof rubber spacer 8 mm.

Available paver spacers models.

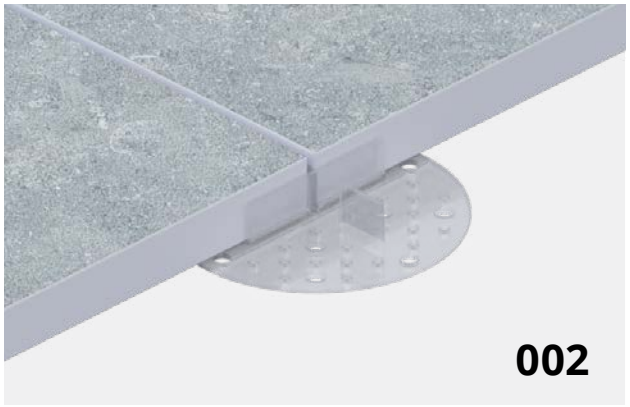

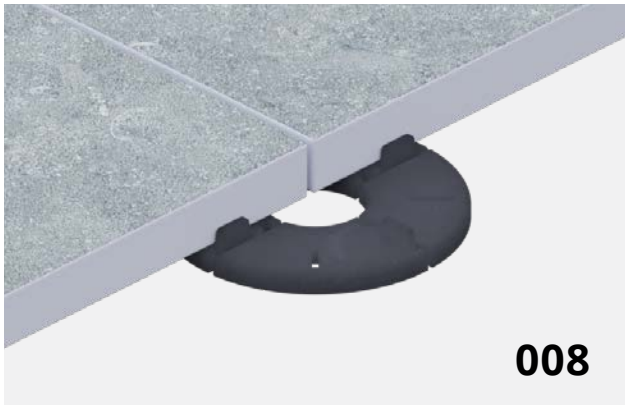

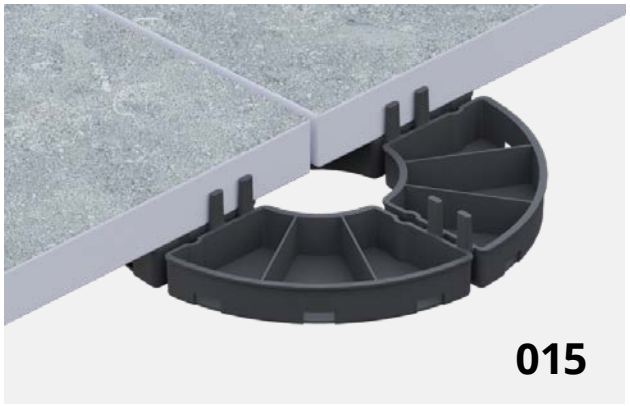



Tile terraces

All paver spacers has built in gap spacers 3 mm. There is an option to use a 5 mm seperate spacers to make joint between tiles larger.

Paver spacers **SUPPORT PADS**

Cross paver spacer **2 mm**

1

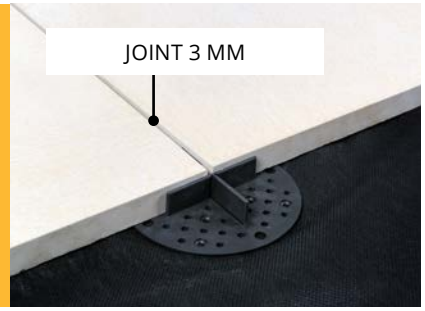

Tile joint

Cross paver spacer 2 mm has built in gap spacers 3 mm to make joint between tiles. There is possibility to make 5 mm joint between tiles using separate spacers.

2



Materials

Paver spacers 2 mm are available in 3 different kind of materials. Black standard plastic, soundproof rubber and transparent plastic.

3



Modular design

2 mm paver spacers where designed modular so it is easy to cut them in pieces.

4

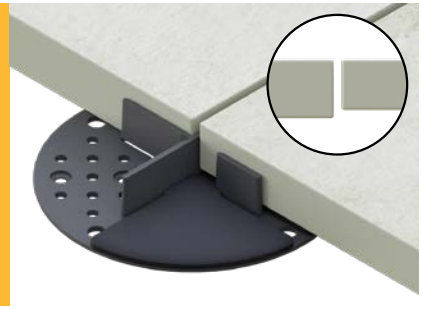

Alligning tiles

On 2 mm paver spacers you can use rubber shim. It helps to make terrace ideally flat.

Cross spacer for pavers **2 mm** transparent





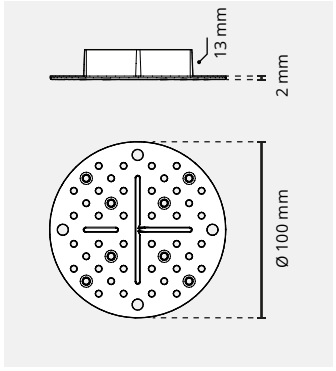

Name	**Cross spacer for pavers to lay on gravels transparent colour with built in 3 mm spacers**
Application	• terrace tile
Short name	**DDP 002 T**
Code	gap spacer 3 mm - **10535** gap spacer 5 mm - **10560**
Pedestal height	**2** mm
Height increase	none
Pedestal dimensions	100 × 100 × 15 mm
Gap spacers width	3 mm
Pedestal load capacity	2500 kg
Material	plastic
Colour	transparent
Where to use	• exterior decking
Subsurface	• hardened sandy substrate • gravel
Included	3 mm version: • support pad DDP 002 T 5 mm version: • support pad DDP 002 T • individual spacer 5 mm (4 pcs)

Paver spacers **SUPPORT PADS**

Cross paver spacer **2 mm**

Cross spacer for pavers **2 mm** black





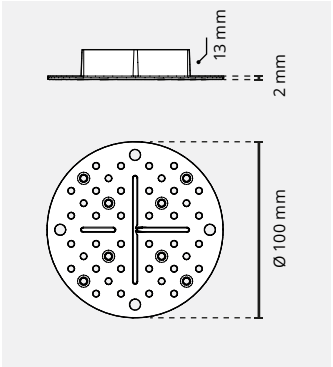

Name	Cross spacer for pavers to lay on gravels black colour with built in 3 mm spacers
Application	• terrace tile
Short name	**DDP 002 B**
Code	gap spacer 3 mm - **10534** gap spacer 5 mm - **10541**
Pedestal height	**2** mm
Height increase	none
Pedestal dimensions	100 × 100 × 15 mm
Gap spacers width	3 mm
Pedestal load capacity	2500 kg
Material	plastic
Colour	black
Where to use	• exterior decking
Subsurface	• hardened sandy substrate • gravel
Included	3 mm version: • support pad DDP 002 B 5 mm version: • support pad DDP 002 B • individual spacer 5 mm (4 pcs)

Cross spacer for pavers **2 mm** rubber





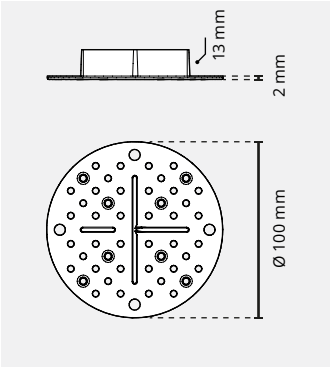

Name	Cross spacer for pavers to lay on gravels rubber black with built in 3 mm spacers
Application	• terrace tile
Short name	**DDP 002 R**
Code	gap spacer 3 mm - **10549** gap spacer 5 mm - **10534**
Pedestal height	**2** mm
Height increase	none
Pedestal dimensions	100 × 100 × 15 mm
Gap spacers width	3 mm
Pedestal load capacity	2500 kg
Material	rubber
Colour	black
Where to use	• exterior decking
Subsurface	• hardened sandy substrate • gravel
Included	3 mm version: • support pad DDP 002 R 5 mm version: • support pad DDP 002 R • individual spacer 5 mm (4 pcs)

Paver spacers **SUPPORT PADS**

Paver spacer **8 mm**

1

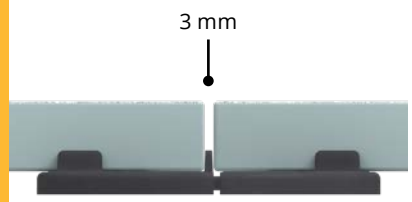

Tile joint

Cross paver spacer 8 mm has built in gap spacers 3 mm to make joint between tiles. There is possibility to make 5 mm joint between tiles using separate spacers.

2



Flexible material

Paver spacers are created from an elastic rubber material so they do not need separate rubber shim for noise cancelling.

4



Modular design

8 mm paver spacers where designed modular so it is easy to cut them in pieces.

5



Stackable

With a stackable design you can raise height of the terrace to 16 or 24 mm.

Rubber paver spacer **8 mm**





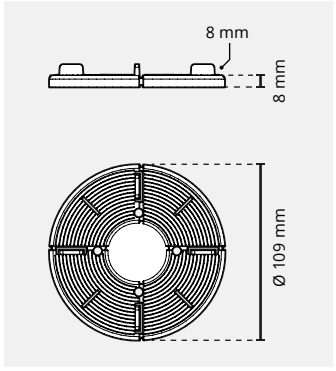

Name	Rubber paver spacer with built in spacer 3 mm
Application	• terrace tile
Short name	DDP 008
Code	gap spacer 3 mm - **10018** gap spacer 5 mm - **10561**
Pedestal height	**8** mm
Height increase	stackable (up to 3 pcs, max 24 mm)
Pedestal dimensions	109 × 109 × 16 mm
Gap spacers width	3 mm
Pedestal load capacity	2500 kg
Material	rubber
Colour	black
Where to use	• exterior decking
Subsurface	• hard subsurface • sensitive subsurface
Included	3 mm version: • support pad DDP 008 5 mm version: • support pad DDP 008 • individual spacer 5 mm (4 pcs)

Paver spacers **SUPPORT PADS**

Paver spacers **10** and **15 mm**

1

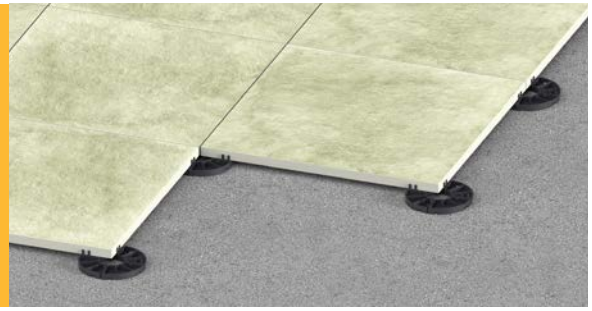

The minimum height of the terrace

10 and 15 mm paver spacers allows to create a low height terraces.

2

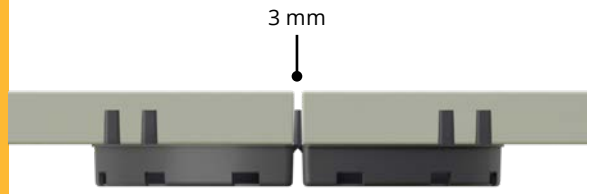

Tile joint

Cross paver spacer 10 and 15 mm has built in gap spacers 3 mm to make joint between tiles. There is possibility to make 5 mm joint between tiles using separate spacers.

3

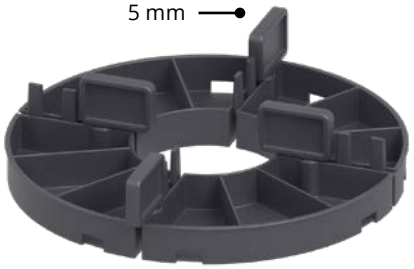

Tile joint

The tile joint can be expand to 5 mm width with using seperate gap spacers installed in dedicated holes.

4



Modular design

10 and 15 mm paver spacers where designed modular so it is easy to cut them in pieces.

5



Stackable

With a stackable design you can raise height of the terrace to 20, 25, 30, 35, 40 and 45 mm.

6

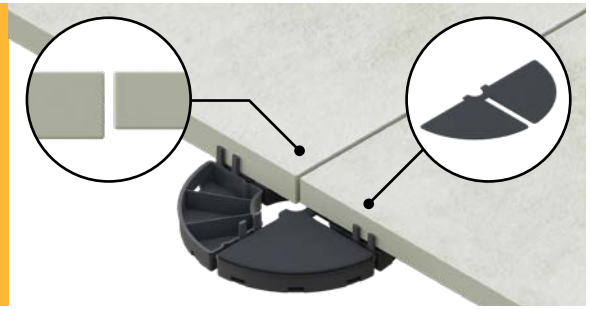

Alligning tiles

On 10 and 15 mm paver spacers you can use rubber shim. It helps to make terrace ideally flat.

Paver spacers **SUPPORT PADS**

Paver spacers **10** and **15 mm**

Paver spacer **10 mm**





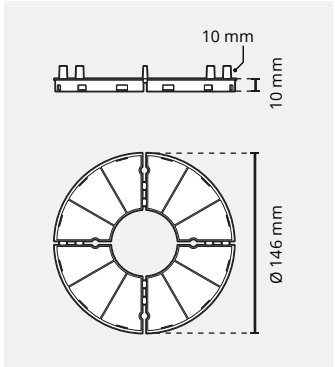

Name	Paver spacer 10 mm
Application	• terrace tile
Short name	**DDP 010**
Code	gap spacer 3 mm - **10019** gap spacer 5 mm - **10564**
Pedestal height	**10** mm
Height increase	stackable (up to 3 pcs, max 30 mm)
Pedestal dimensions	146 × 146 × 20 mm
Gap spacers width	3 mm
Pedestal load capacity	2500 kg
Material	plastic
Colour	black
Where to use	• exterior decking
Subsurface	• hard subsurface • sensitive subsurface
Included	3 mm version: • support pad DDP 010 5 mm version: • support pad DDP 010 • individual spacer 5 mm (4 pcs)

Paver spacer **15 mm**





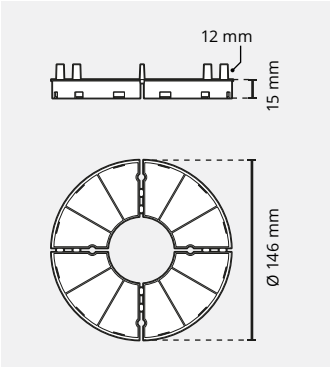

Name	Paver spacer 15 mm
Application	• terrace tile
Short name	**DDP 015**
Code	gap spacer 3 mm - **10020** gap spacer 5 mm - **10566**
Pedestal height	**15** mm
Height increase	stackable (up to 3 pcs, max 45 mm)
Pedestal dimensions	146 × 146 × 27 mm
Gap spacers width	3 mm
Pedestal load capacity	2500 kg
Material	plastic
Colour	black
Where to use	• exterior decking
Subsurface	• hard subsurface • sensitive subsurface
Included	3 mm version: • support pad DDP 015 5 mm version: • support pad DDP 015 • individual spacer 5 mm (4 pcs)

Paver spacers **SUPPORT PADS**

Paver spacer **16 mm**

1

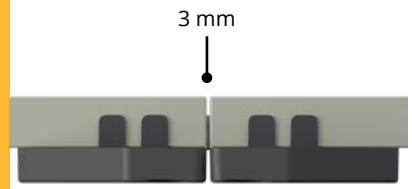

Tile joint

Cross paver spacer 16 mm has built in gap spacers 3 mm to make joint between tiles. There is possibility to make 5 mm joint between tiles using separate spacers.

2



Stackable

With a stackable design you can raise height of the terrace to 32 and 48 mm.

3



Modular design

8 mm paver spacers where designed modular so it is easy to cut them in pieces to place them along the wall and corners.

4

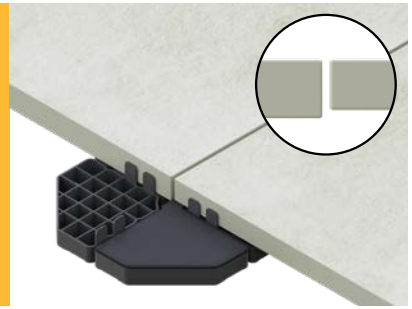

Alligning tiles

On 16 mm paver spacers you can use rubber shim. It helps to make terrace ideally flat.

Paver spacer **16 mm**





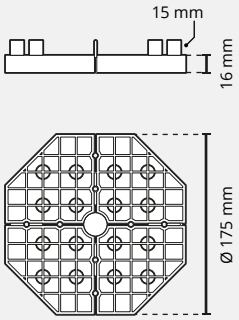

Name	Paver spacer 5/8 (16 mm)
Application	• terrace tile
Short name	**DDP 016**
Code	gap spacer 3 mm - **10021** gap spacer 5 mm - **10568**
Pedestal height	**16** mm
Height increase	stackable (up to 3 pcs, max 48 mm)
Pedestal dimensions	175 × 175 × 31 mm
Gap spacers width	3 mm
Pedestal load capacity	2500 kg
Material	plastic
Colour	black
Where to use	• exterior decking
Subsurface	• hard subsurface • sensitive subsurface
Included	3 mm version: • support pad DDP 016 5 mm version: • support pad DDP 016 • individual spacer5 mm (4 pcs)

Paver spacers **SUPPORT PADS**

Accesories for SUPPORT PADS

Image	Name	Where to use	Short name	Code	Dimensions a - length b - width h - height	Example of application
	**Gap spacer 5 mm**	Gap spacers makes 5 mm joint gap between tiles.	L5	10168	a - 16 mm b - 5 mm h - 15 mm	
	**Rubber shim SH100, 1,5 mm**	Dedicated to use with fixed height paver spacers DDP 008. Can be used tile thickness compensation.	SH100	10399	a - 100 mm b - 100 mm h - 1,5 mm	
	**Rubber shim SH145, 1,5 mm**	Dedicated to use with fixed height paver spacers DDP 010 and DDP 015. Can be used tile thickness compensation.	SH145	10314	a - 145 mm b -145 mm h -1,5 mm	
	**Rubber shim SH175, 1,5 mm**	Dedicated to use with fixed height paver spacers DDP 016. Can be used tile thickness compensation.	SH175	10318	a - 175 mm b - 175 mm h - 1,5 mm	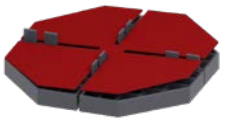

Paver spacers **SUPPORT PADS**

Accesories for SUPPORT PADS

Image	Name	Where to use	Short name	Code	Dimensions a - length b - width h - height	Example of application
	**SBR rubber pad SBR 100, 3 mm**	Designed for the DDP 002 and DDP 008. Placed under the pedestal gives additional protection of the water membrane. Also gives additional noise cancellation. Gives additional height of 3 mm.	SBR 100/3	104161	a - 100 mm b - 100 mm h - 3 mm	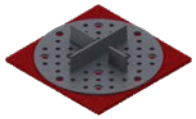
	**SBR rubber pad SBR 100, 8 mm**	Designed for the DDP 002 and DDP 008. Placed under the pedestal gives additional protection of the water membrane. Also gives additional noise cancellation. Gives additional height of 8 mm.	SBR 100/8	104162	a - 100 mm b - 100 mm h - 8 mm	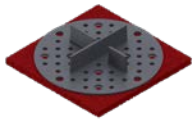
	**SBR rubber pad SBR 200, 3 mm**	Designed for the DDP 010, DDP 015 and DDP 016. Placed under the pedestal gives additional protection of the water membrane. Also gives additional noise cancellation. Gives additional height of 3 mm.	SBR 200/3	102557	a - 200 mm b - 200 mm h - 3 mm	
	**SBR rubber pad SBR 200, 8 mm**	Designed for the DDP 010, DDP 015 and DDP 016. Placed under the pedestal gives additional protection of the water membrane. Also gives additional noise cancellation. Gives additional height of 8 mm.	SBR 200/8	102559	a - 200 mm b - 200 mm h - 8 mm	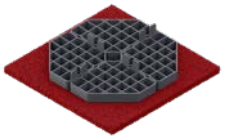

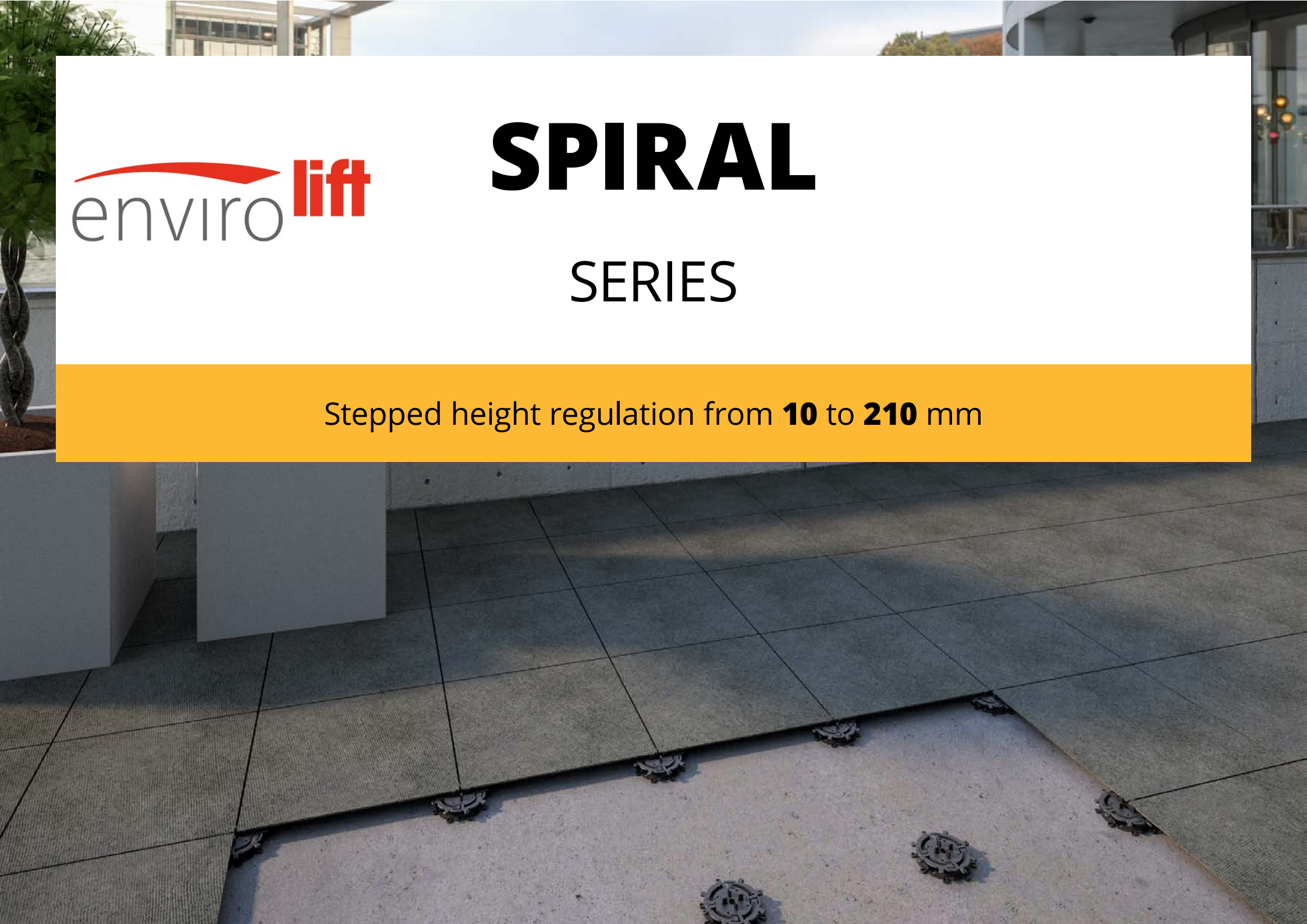

enviro lift

SPIRAL

SERIES

Stepped height regulation from **10** to **210** mm

SPIRAL series

Where to use

Versatile solution for terraces

SPIRAL Series allows to regulate the height of the terrace in a range from 10 to 210 mm. SPIRAL Series has a big load capacity. It is easy to adjust height of each 1 mm. SPIRAL Series is great to adjust low height levels beginning from 10 mm. There are plenty of additional compatible accessories.

Low height

Adjustment range from 10 mm

Load capacity

Pedestals are resistant for high loads

Height adjustment

Step height adjustment every 1 mm

Simple to use

Very simple and quick to use

Self-leveling head

Automatically corrects the slope of the substrate by 0-6%

TILE DECKING



Tiles on the pedestals

Using a spacer disc creates joint between tiles. Choose between 3 and 5 mm spacers.

DECKS



Decking joists on the pedestals

Using joist adapter allows to screw them togheter. It is possible to use joist made of wood, WPC, aluminium.

SPIRAL series

Pedestal **design**

Pedestal construction

SPIRAL Series pedestal has a modular design.
Using height couplers helps reaching heights more than 90 mm.

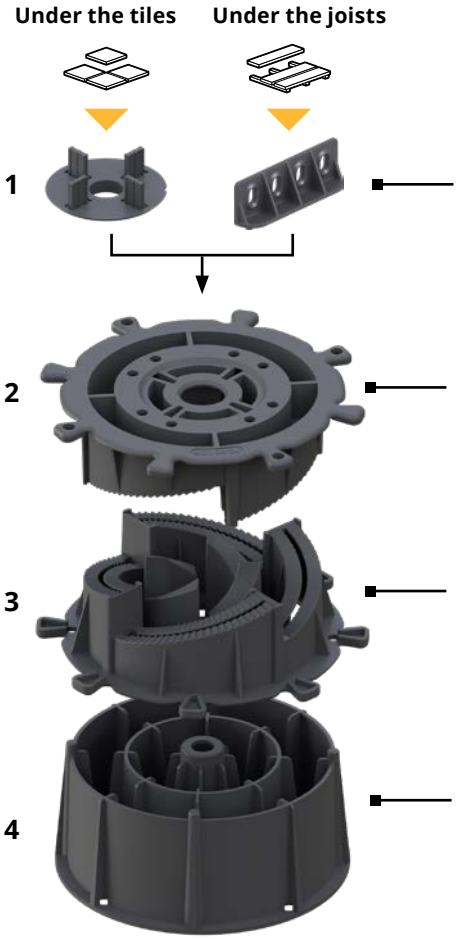

1. Spacer disc or joist adapter
Spacer disc is for tiles, Joist adapter is for decking.

2. Upper element
Pedestals head with holes for mounting spacer disc or joist adapter.

3. Lower element
Pedestal base with a possibility to mount height coupler.

4. Height coupler
Height coupler extend pedetals height with additional 60 mm.

Pedestal height adjustment

SPIRAL pedestals have a step height regulation. Each step is a 1 mm height. Adjustment is done by rotating upper or lower part.

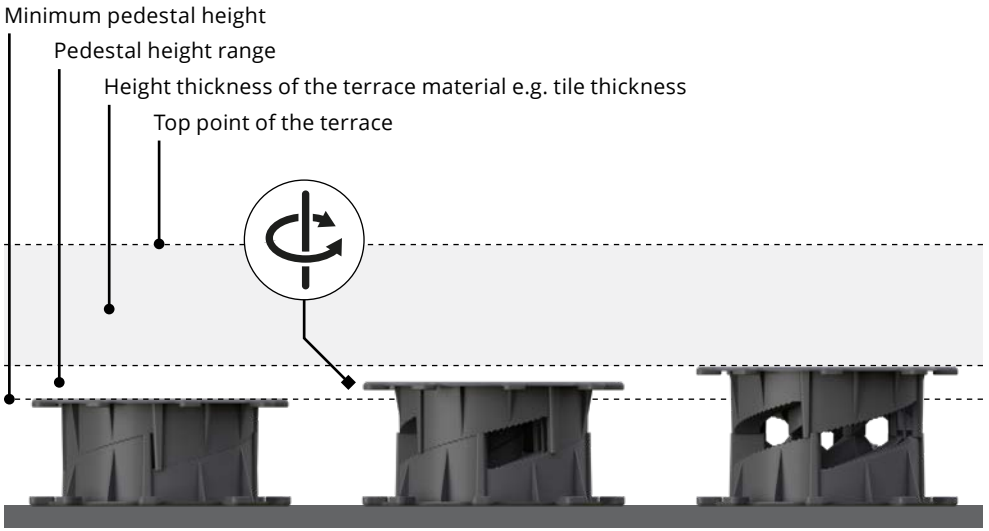

Terrace tiles



Deck



Advantages

1

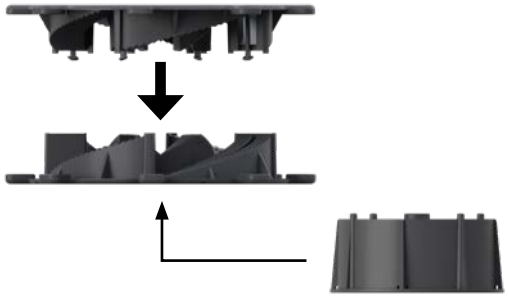

Easy installation

SPIRAL pedestals consists just of two parts and spacer disc. That is why it`s very fast and easy to use. Assembly with a height coupler is also easy to install.

2

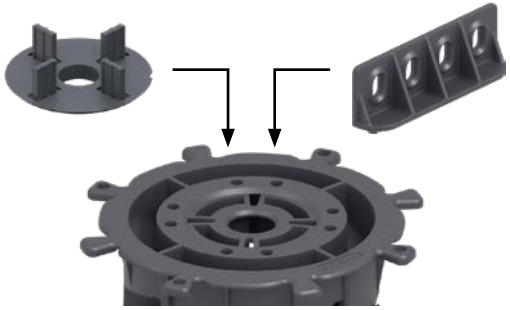

For tiles and decking

Pedestal head allows to mount a spacer disc or joist adapter. It makes SPIRAL pedestals ready to use for tile and decking.

3



High load capacity

SPIRAL pedestals has a very high load capacity.

4



For sloped areas

SPIRAL pedestals can be used on the areas with a radical slope. Using self leveling head allows to compensate slope up to 6%.

5

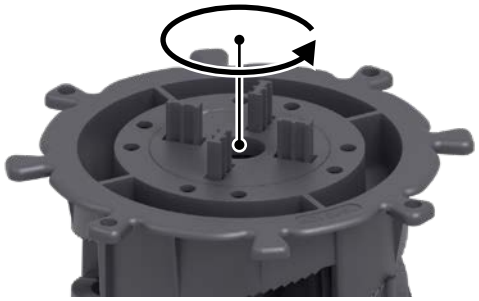

Rotating spacer discs

Spacer discs can be easily rotated. It allows to regulate the height with tiles laid on it.

6



Easy transportation

SPIRAL pedestals are easy for logistics and because of that transport is cheaper.

SPIRAL series

SPIRAL pedestals

FOR TILES



Spacer disc 3 mm
joint width 3 mm

Spacer disc 5 mm
joint width 5 mm

FOR DECKING JOISTS



Joist adapter
for timber joists, composite WPC, aluminium

SPIRAL Series height range from **10** - **210** mm

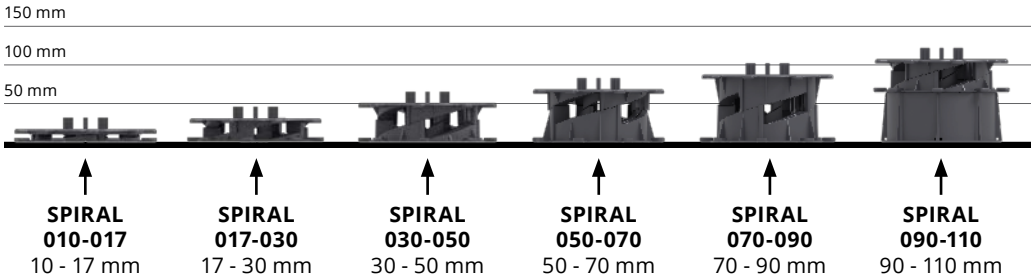

SPIRAL 010-017
10 - 17 mm

SPIRAL 017-030
17 - 30 mm

SPIRAL 030-050
30 - 50 mm

SPIRAL 050-070
50 - 70 mm

SPIRAL 070-090
70 - 90 mm

SPIRAL 090-110
90 - 110 mm

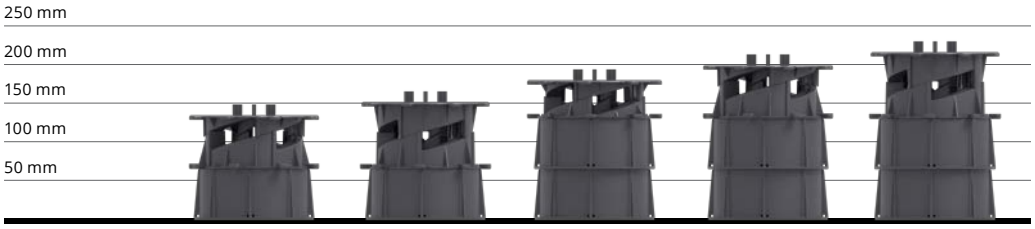

SPIRAL 110-130
110 - 130 mm

SPIRAL 130-150
130 - 150 mm

SPIRAL 150-170
150 - 170 mm

SPIRAL 170-190
170 - 190 mm

SPIRAL 190-210
190 - 210 mm

SPIRAL pedestal **010-017**





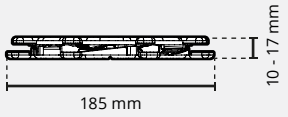

Name	SPIRAL pedestal 010-017
Application	• terrace with tiles • terrace with decking
Short name	SPIRAL 010-017
Code	**For tiles** • spacer 3 mm: **107474** • spacer 5 mm: **10754** **For decking** • joist L adapter: **10755**
Pedestal height range	**10 - 17** mm
Height adjustment	step height regulation (1 mm)
Pedestal dimensions	185 × 185 × (10 - 17) mm
Pedestal load capacity	2400 kg
Material	plastic
Colour	black
Where to use	• exterior decking • interior raised floors
Subsurface	• hard subsurface • sensitive subsurface • sloped surface
Included	• joist adapter or gap spacers (3 or 5 mm) • SPIRAL pedestal 010-017

SPIRAL series

SPIRAL pedestals

SPIRAL pedestal **017-030**



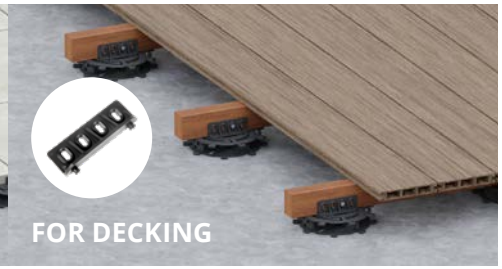





Name	SPIRAL pedestal 017-030
Application	• terrace with tiles • terrace with decking
Short name	SPIRAL 017-030
Code	For tiles • spacer 3 mm: **10433** • spacer 5 mm: **10434** For decking • joist L adapter: **10429**
Pedestal height range	**17 - 30** mm
Height adjustment	step height regulation (1 mm)
Pedestal dimensions	168 × 168 × (17 - 30) mm
Pedestal load capacity	2400 kg
Material	plastic
Colour	black
Where to use	• exterior decking • interior raised floors
Subsurface	• hard subsurface • sensitive subsurface • sloped surface
Included	• joist adapter or gap spacers (3 or 5 mm) • SPIRAL pedestal 017-030

SPIRAL pedestal **030-050**



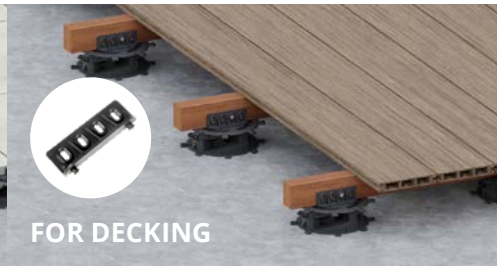



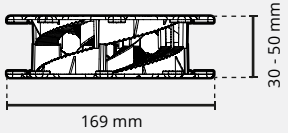

Name	SPIRAL pedestal 030-050
Application	• terrace with tiles • terrace with decking
Short name	SPIRAL 030-050
Code	For tiles • spacer 3 mm: **104334** • spacer 5 mm: **10884** For decking • joist L adapter: **104333**
Pedestal height range	**30 - 50** mm
Height adjustment	step height regulation (1 mm)
Pedestal dimensions	169 × 169 × (30 - 50) mm
Pedestal load capacity	2400 kg
Material	plastic
Colour	black
Where to use	• exterior decking • interior raised floors
Subsurface	• hard subsurface • sensitive subsurface • sloped surface
Included	• joist adapter or gap spacers (3 or 5 mm) • SPIRAL pedestal 030-050

SPIRAL series

SPIRAL pedestals

SPIRAL pedestal **050-070**



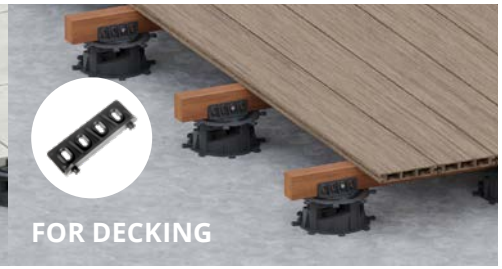



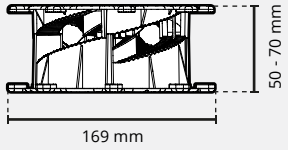

Name	SPIRAL pedestal 050-070
Application	• terrace with tiles • terrace with decking
Short name	SPIRAL 050-070
Code	For tiles • spacer 3 mm: **104364** • spacer 5 mm: **10887** For decking • joist L adapter: **10889**
Pedestal height range	**50 - 70** mm
Height adjustment	step height regulation (1 mm)
Pedestal dimensions	169 × 169 × (50 - 70) mm
Pedestal load capacity	2400 kg
Material	plastic
Colour	black
Where to use	• exterior decking • interior raised floors
Subsurface	• hard subsurface • sensitive subsurface • sloped surface
Included	• joist adapter or gap spacers (3 or 5 mm) • SPIRAL pedestal 050-070

SPIRAL pedestal **070-090**



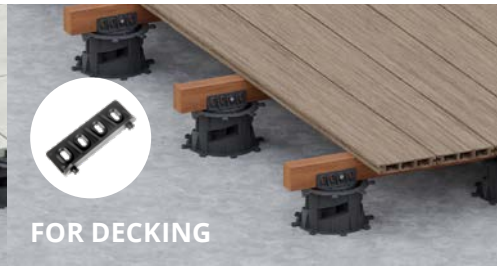



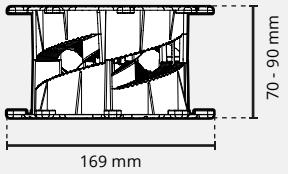

Name	SPIRAL pedestal 070-090
Application	• terrace with tiles • terrace with decking
Short name	SPIRAL 070-090
Code	For tiles • spacer 3 mm: **104331** • spacer 5 mm: **10888** For decking • joist L adapter: **10890**
Pedestal height range	**70 - 90** mm
Height adjustment	step height regulation (1 mm)
Pedestal dimensions	169 × 169 × (70 - 90) mm
Pedestal load capacity	2400 kg
Material	plastic
Colour	black
Where to use	• exterior decking • interior raised floors
Subsurface	• hard subsurface • sensitive subsurface • sloped surface
Included	• joist adapter or gap spacers (3 or 5 mm) • SPIRAL pedestal 070-090

SPIRAL series

SPIRAL pedestals

SPIRAL pedestal **090-110**



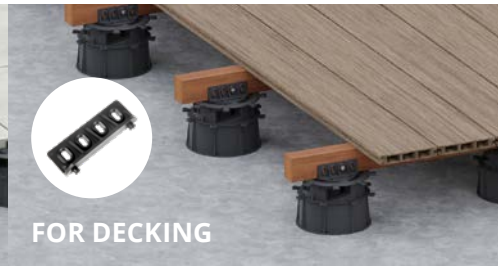



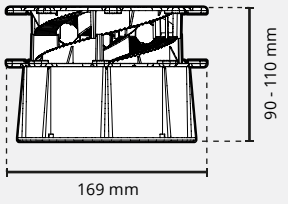

Name	SPIRAL pedestal 090-110
Application	• terrace with tiles • terrace with decking
Short name	SPIRAL 090-110
Code	**For tiles** • spacer 3 mm: **104334** + **104332** • spacer 5 mm: **10884** + **104332** **For decking** • joist L adapter: **104333** + **104332**
Pedestal height range	**90 - 110** mm
Height adjustment	step height regulation (1 mm)
Pedestal dimensions	169 × 169 × (90 - 110) mm
Pedestal load capacity	2400 kg
Material	plastic
Colour	black
Where to use	• exterior decking • interior raised floors
Subsurface	• hard subsurface • sensitive subsurface • sloped surface
Included	• joist adapter or gap spacers (3 or 5 mm) • SPIRAL pedestal 030-050 • height coupler DS60

SPIRAL pedestal **110-130**



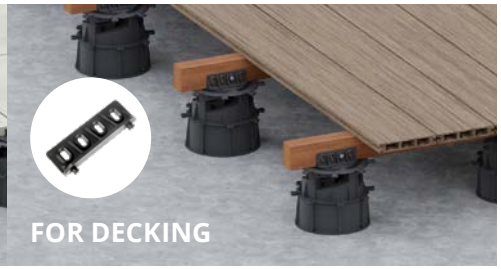



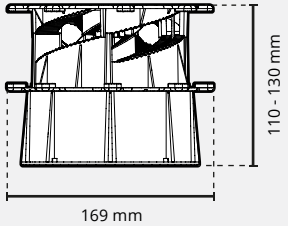

Name	SPIRAL pedestal 110-130
Application	• terrace with tiles • terrace with decking
Short name	SPIRAL 110-130
Code	**For tiles** • spacer 3 mm: **104364** + **104332** • spacer 5 mm: **10887** + **104332** **For decking** • joist L adapter: **10889** + **104332**
Pedestal height range	**110 - 130** mm
Height adjustment	step height regulation (1 mm)
Pedestal dimensions	169 × 169 × (110 - 130) mm
Pedestal load capacity	2400 kg
Material	plastic
Colour	black
Where to use	• exterior decking • interior raised floors
Subsurface	• hard subsurface • sensitive subsurface • sloped surface
Included	• joist adapter or gap spacers (3 or 5 mm) • SPIRAL pedestal 050-070 • height coupler DS60

SPIRAL pedestals

SPIRAL pedestal **130-150**



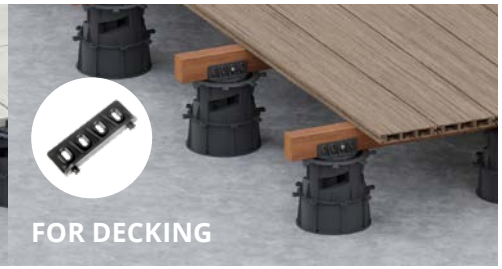



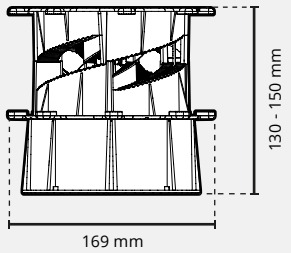

Name	SPIRAL pedestal 130-150
Application	• terrace with tiles • terrace with decking
Short name	SPIRAL 130-150
Code	**For tiles** • spacer 3 mm: **104331** + **104332** • spacer 5 mm: **10888** + **104332** **For decking** • joist L adapter: **10890** + **104332**
Pedestal height range	**130 - 150** mm
Height adjustment	step height regulation (1 mm)
Pedestal dimensions	169 × 169 × (130 - 150) mm
Pedestal load capacity	2400 kg
Material	plastic
Colour	black
Where to use	• exterior decking • interior raised floors
Subsurface	• hard subsurface • sensitive subsurface • sloped surface
Included	• joist adapter or gap spacers (3 or 5 mm) • SPIRAL pedestal 070-090 • height coupler DS60

SPIRAL pedestal **150-170**



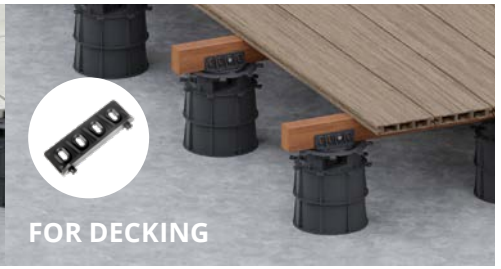



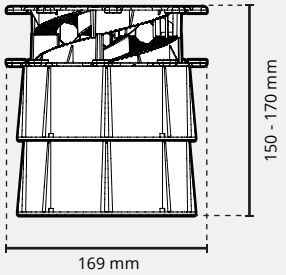

Name	SPIRAL pedestal 150-170
Application	• terrace with tiles • terrace with decking
Short name	SPIRAL 150-170
Code	**For tiles** • spacer 3 mm: **104334** + 2× **104332** • spacer 5 mm: **10884** + 2× **104332** **For decking** • joist L adapter: **104333** + 2× **104332**
Pedestal height range	**150 - 170** mm
Height adjustment	step height regulation (1 mm)
Pedestal dimensions	169 × 169 × (150 - 170) mm
Pedestal load capacity	2400 kg
Material	plastic
Colour	black
Where to use	• exterior decking • interior raised floors
Subsurface	• hard subsurface • sensitive subsurface • sloped surface
Included	• joist adapter or gap spacers (3 or 5 mm) • SPIRAL pedestal 030-050 • height coupler DS60 (2 pcs.)

SPIRAL series

SPIRAL pedestals

SPIRAL pedestal **170-190**



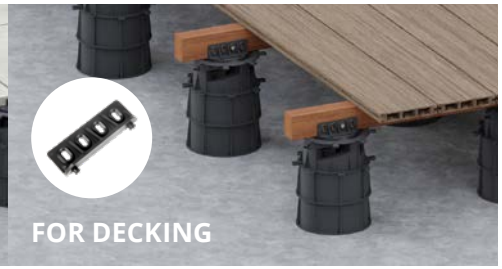



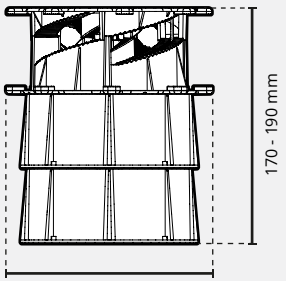

Name	SPIRAL pedestal 170-190
Application	• terrace with tiles • terrace with decking
Short name	SPIRAL 170-190
Code	**For tiles** • spacer 3 mm: **104364** + 2× **104332** • spacer 5 mm: **10887** + 2× **104332** **For decking** • joist L adapter: **10889** + 2× **104332**
Pedestal height range	**170 - 190** mm
Height adjustment	step height regulation (1 mm)
Pedestal dimensions	169 × 169 × (170 - 190) mm
Pedestal load capacity	2400 kg
Material	plastic
Colour	black
Where to use	• exterior decking • interior raised floors
Subsurface	• hard subsurface • sensitive subsurface • sloped surface
Included	• joist adapter or gap spacers (3 or 5 mm) • SPIRAL pedestal 050-070 • height coupler DS60 (2 pcs.)

SPIRAL pedestal **190-210**



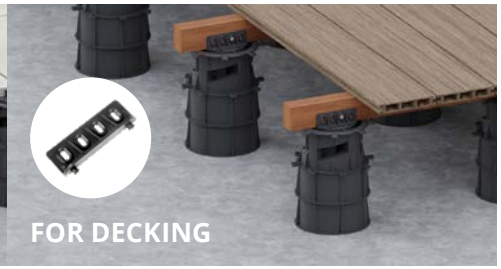



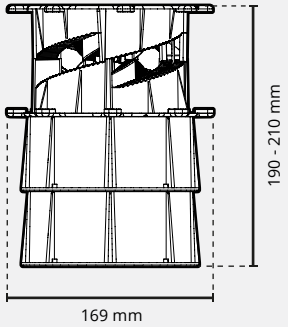

Name	SPIRAL pedestal 190-210
Application	• terrace with tiles • terrace with decking
Short name	SPIRAL 190-210
Code	**For tiles** • spacer 3 mm: **104331** + 2× **104332** • spacer 5 mm: **10888** + 2× **104332** **For decking** • joist L adapter: **10890** + 2× **104332**
Pedestal height range	**190 - 210** mm
Height adjustment	step height regulation (1 mm)
Pedestal dimensions	169 × 169 × (190 - 210) mm
Pedestal load capacity	2400 kg
Material	plastic
Colour	black
Where to use	• exterior decking • interior raised floors
Subsurface	• hard subsurface • sensitive subsurface • sloped surface
Included	• joist adapter or gap spacers (3 or 5 mm) • SPIRAL pedestal 070-090 • height coupler DS60 (2 pcs.)

SPIRAL series **accessories**

Image	Name	Where to use	Short name	Code	Dimensions a - length b - width h - height	Example of application
	**Gap spacer 3 mm**	Gap spacers makes 3 mm joint gap between tiles.	D3	10441	a - 65 mm b - 65 mm h - 14 mm	
	**Gap spacer 5 mm**	Gap spacers makes 5 mm joint gap between tiles.	D5	10440	a - 65 mm b - 65 mm h - 14 mm	
	**Joist adapter**	Helps to fix decking joist to the pedestal.	AD	10000	a - 85 mm b - 15 mm h - 28 mm	
	**Gap spacer 3 mm**	Individual gap spacers are used to helps to create non grid joints between tiles e.g. along the walls.	L3	10167	a - 1 mm b - 3 mm h - 11 mm	
	**Gap spacer 5 mm**	Individual gap spacers are used to helps to create non grid joints between tiles e.g. along the walls.	L5	10168	a - 16 mm b - 5 mm h - 15 mm	

SPIRAL series

SPIRAL Series **accessories**

Image	Name	Where to use	Short name	Code	**Dimensions** a - length b - width h - height	**Example of application**
	**Side finishing closure plate**	It is used to make vertical masking of the ventilated terrace. Two pieces increase the height of the bracket by 7 mm.	DDP CP	103741	a - 257 mm b - 257 mm h - 3,5 mm	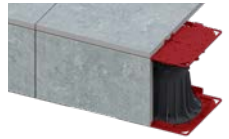
	**Rubber shim SH145 1,5 mm**	Noise cancellation and tile thickness compensation. Gives additional height of 1,5 mm.	SH145	10314	a - 145 mm b - 145 mm h - 1,5 mm	
	**Self leveling head LE MAX 0-6% 20 mm height**	Self leveling of theterrace with a slope range from 0% to 6%. Gives additional height of 20 mm.	LE MAX	10680	a - 157 mm b - 157 mm h - 20 mm	
	**Height coupler 60 mm**	Height coupler allows to extend pedestal height with additional 60 mm.	DS 60	104332	a - 150 mm b - 150 mm h - 60 mm	
	**SBR rubber pad SBR200, 3 mm**	Placed under the pedestal gives additional protection of the water membrane. Also gives additional noise cancellation. Gives additional height of 3 mm.	SBR 200/3	102557	a - 200 mm b - 200 mm h - 3 mm	
	**SBR rubber pad SBR200, 8 mm**	Placed under the pedestal gives additional protection of the water membrane. Also gives additional noise cancellation. Gives additional height of 8 mm.	SBR 200/8	102559	a - 200 mm b - 200 mm h - 8 mm	



enviro lift

STANDARD

SERIES

Smooth height regulation from **30** to **420** mm

STANDARD series

Where to use

Versatile and everlasting

Adjustable pedestal STANDARD Series is a versatile solution for raised outdoor terraces. It allows to adjust the height from 30 up to 420 mm. Smooth height regulation with a rotating screw nut allows to regulate the height even with the tiles on it. For fast height adjustment it can be used with a drill driver bit tool. STANDARD pedestals proved it`s quality and usage on thousands of projects in every part of the world. There is a possibilty to use with additional accessories.

Self leveling head

Automatically slope compensation from 0 to 7%

Most popular height range

Height adjustment range from 30 to 420 mm

High load resistance

Heavy loads pedestals

Screw nut height regulation

Adjust height easily

Versatility

Wide range of accessories

TILE TERRACE



Tiles on pedestals

Using a spacer disc creates joint between tiles. Choose between 3 and 5 mm spacers.

DECKING TERRACE



Joists on pedestals

Decking joists on the pedestals. Using joist adapter allows to screw them togheter. It is possible to use joist made of wood, WPC, aluminium.

STANDARD series

Pedestal **design**

Pedestal construction

STANDARD pedestal has a modular design
Pedestal height can be extended with a 100 mm height couplers.

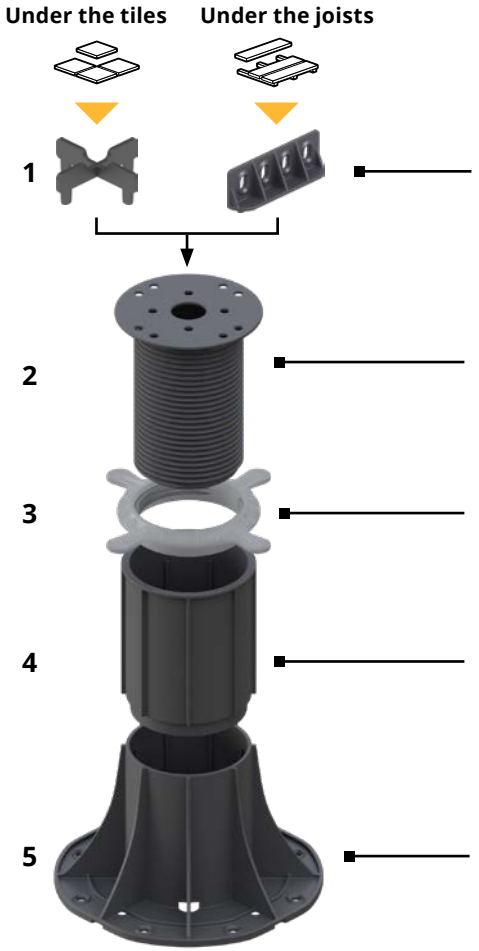

1. Cross spacer or joist adapter
Cross spacer is for tiles, joist adapter is for decking.

2. Screw
Pedestal head with screw allows for pedestal height adjustment and stable support.

3. Screw nut
Rotating screw nut adjust the height of pedestals.

4. Height coupler, distance sleeve
Height coupler extend the height range with additional 100 mm

5. Pedestal base
Stable pedestal base with side ribs making pedestal stronger.

Smooth height adjustment

STANDARD pedestals allows for smooth height regulation with rotating screw nut.

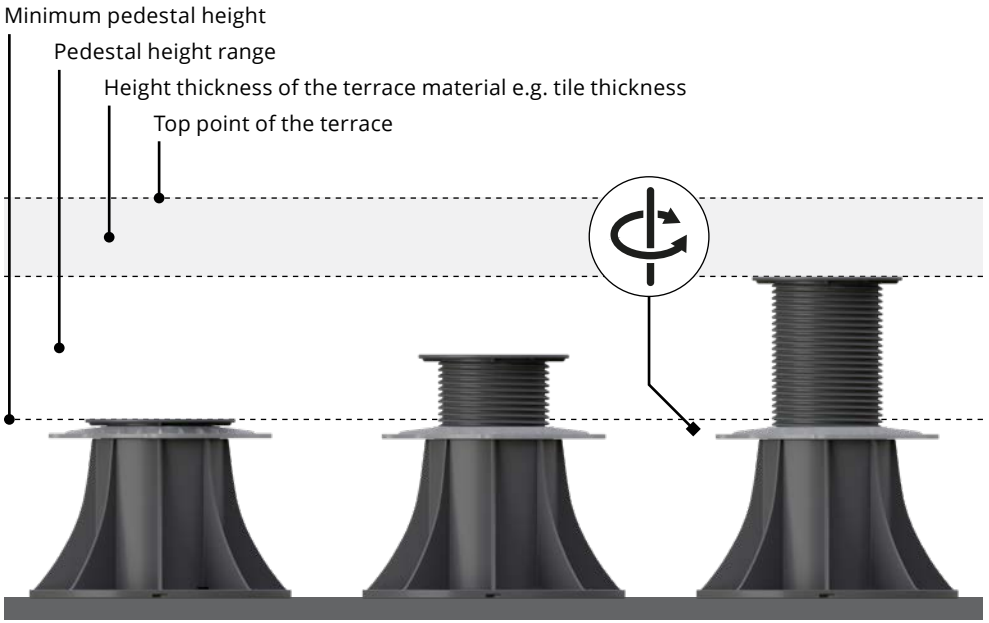

Deck

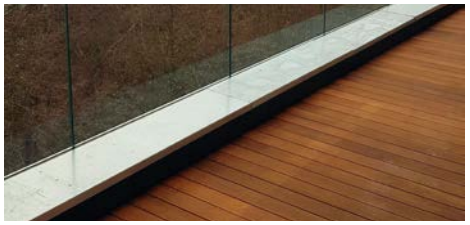

Terrace tiles



STANDARD series

Advantages

1

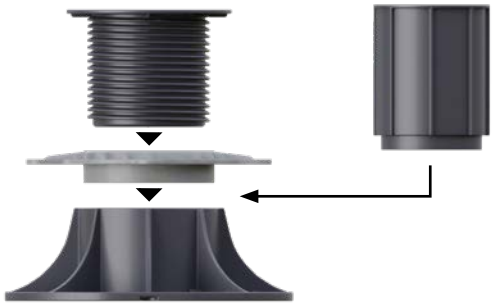

Easy installation

STANDARD pedestals consists of three parts - base, screw nut and pedestal head with screw. On the pedestal head can be use both cross spacer for tiles and joist adapter for decking.

2

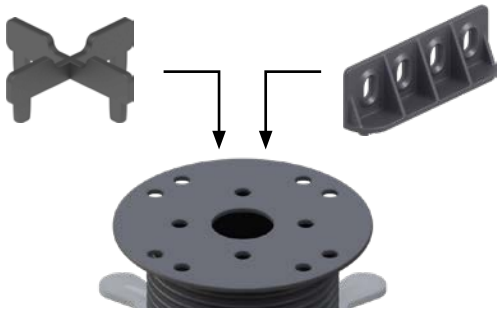

For tiles and decking

Versatile pedestal head allows for using with cross spacer for tiles and joist adapter for decking.

3

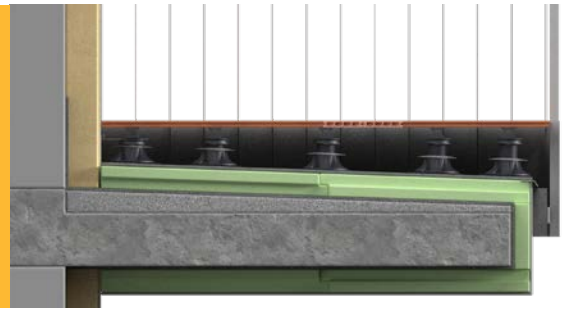

Terrace basis

STANDARD pedestals can be used on all types of basis even these with a water membrane protection or XPS. Our recommended minimum hardness for stable usage is 300 kPa.

4

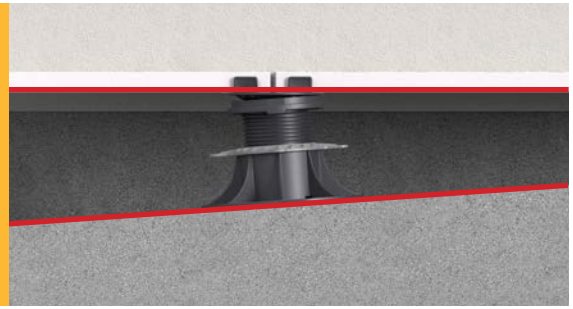

For a sloped surfaces

STANDARD pedestals can be used on the areas with a radical slope. Using self leveling head allows to compensate slope up to 7%.

5



Solid support

Wide pedestal head and self leveling head gives a stable support for tiles and for decking.

6



High load capacity

STANDARD pedestals has a high load capacity.

STANDARD series

STANDARD pedestals

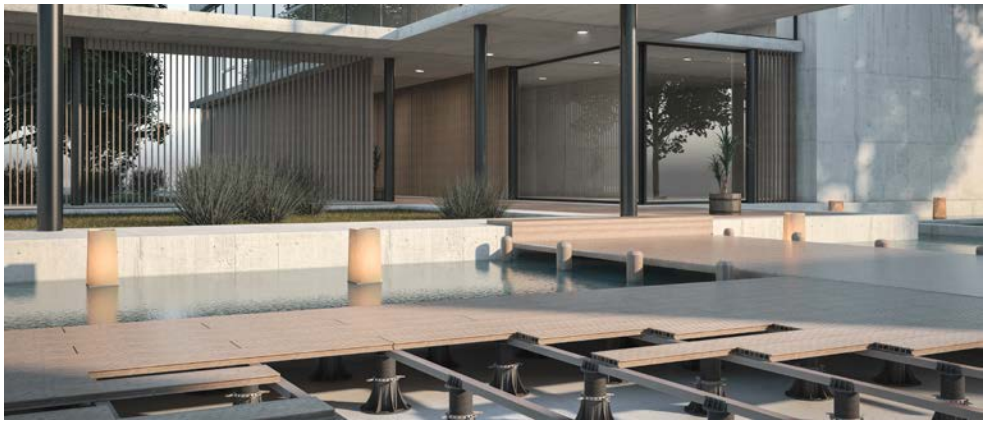

FOR TILES

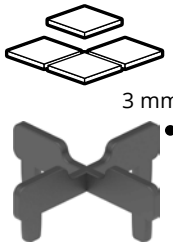

Cross spacer K3
joint width 3 mm

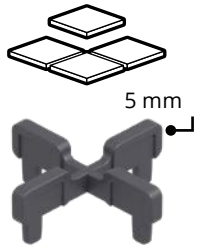

Cross spacer K5
joint width 5 mm

FOR DECKING JOISTS



Joist adapter
for wood, composite, aluminium bars.

STANDARD Series - height range from **30** to **420** mm

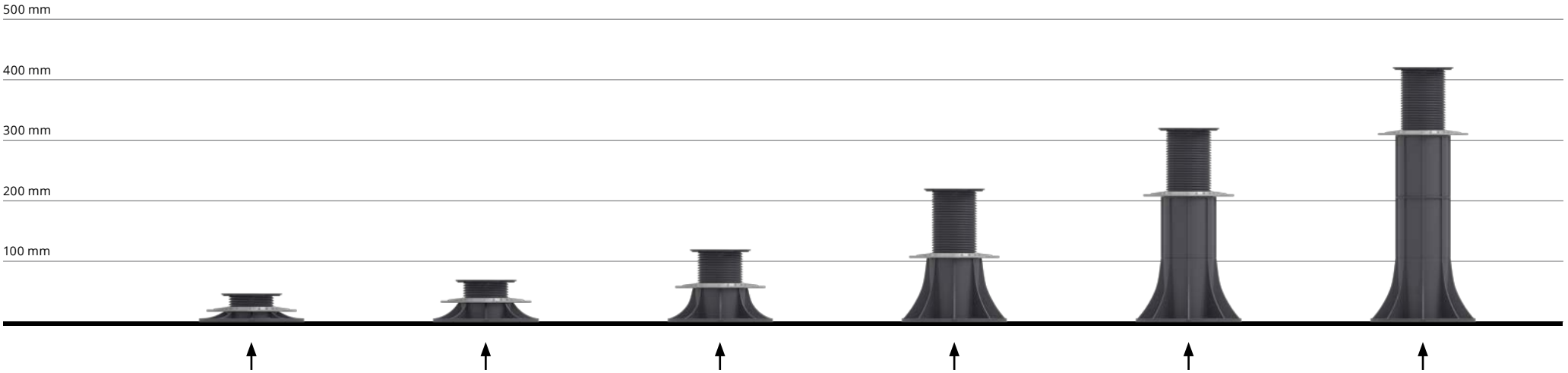

STANDARD 030-045
30 - 45 mm

STANDARD 45-70
45 - 70 mm

STANDARD 70-120
70 - 120 mm

STANDARD 120-220
120 - 220 mm

STANDARD 220-320
220 - 320 mm

STANDARD 320-420
320 - 420 mm

STANDARD series

STANDARD pedestals

STANDARD pedestal **030-045**



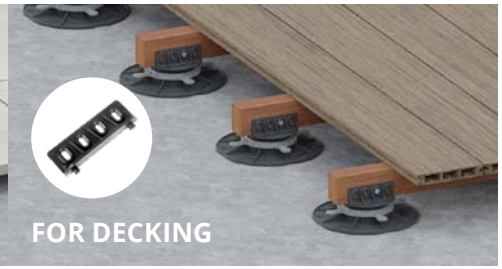



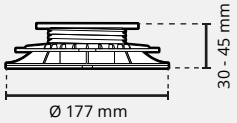

Name	STANDARD pedestal 030-045
Application	• terrace with tiles • terrace with decking
Short name	STANDARD 030-045
Code	For tiles • spacer 3 mm: **10746** • spacer 5 mm: **104201** For decking • joist L adapter: **10023**
Pedestal height range	**30 - 45** mm
Height adjustment	smooth
Pedestal dimensions	177 × 177 × (30 - 45) mm
Pedestal load capacity	1100 kg
Material	plastic
Colour	black with grey screw nut
Where to use	• external decking • interior raised floors
Subsurface	• hard subsurface • sensitive subsurface • sloped surface
Included	• tile cross spacer (3 or 5 mm) or joist L adapter • STANDARD pedestal 030-045

STANDARD pedestal **045-070**



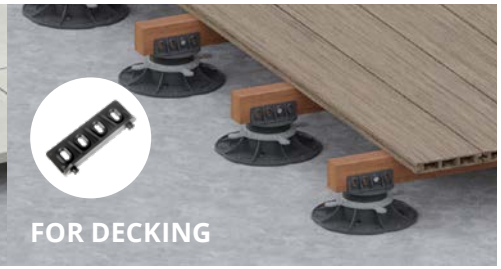



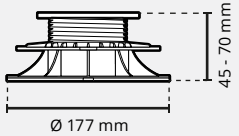

Name	STANDARD pedestal 045-070
Application	• terrace with tiles • terrace with decking
Short name	STANDARD 045-070
Code	For tiles • spacer 3 mm: **10747** • spacer 5 mm: **104202** For decking • joist L adapter: **10027**
Pedestal height range	**45 - 70** mm
Height adjustment	smooth
Pedestal dimensions	177 × 177 × (45 - 70) mm
Pedestal load capacity	1100 kg
Material	plastic
Colour	black with grey screw nut
Where to use	• external decking • interior raised floors
Subsurface	• hard subsurface • sensitive subsurface • sloped surface
Included	• tile cross spacer (3 or 5 mm) or joist L adapter • STANDARD pedestal 045-070

STANDARD series

STANDARD pedestals

STANDARD pedestal **070-120**



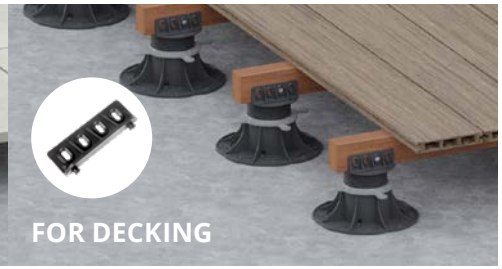



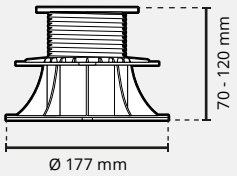

Name	STANDARD pedestal 070-120
Application	• terrace with tiles • terrace with decking
Short name	STANDARD 070-120
Code	For tiles • spacer 3 mm: **10748** • spacer 5 mm: **104203** For decking • joist L adapter: **10031**
Pedestal height range	**70 - 120** mm
Height adjustment	smooth
Pedestal dimensions	177 × 177 × (70 - 120) mm
Pedestal load capacity	1100 kg
Material	plastic
Colour	black with grey screw nut
Where to use	• external decking • interior raised floors
Subsurface	• hard subsurface • sensitive subsurface • sloped surface
Included	• tile cross spacer (3 or 5 mm) or joist L adapter • STANDARD pedestal 070-120

STANDARD pedestal **120-220**







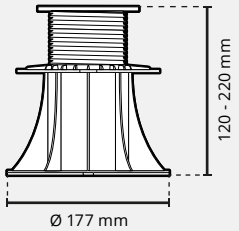

Name	STANDARD pedestal 120-220
Application	• terrace with tiles • terrace with decking
Short name	STANDARD 120-220
Code	For tiles • spacer 3 mm: **10749** • spacer 5 mm: **104204** For decking • joist L adapter: **10035**
Pedestal height range	**120 - 220** mm
Height adjustment	smooth
Pedestal dimensions	177 × 177 × (120 - 220) mm
Pedestal load capacity	1100 kg
Material	plastic
Colour	black with grey screw nut
Where to use	• external decking • interior raised floors
Subsurface	• hard subsurface • sensitive subsurface • sloped surface
Included	• tile cross spacer (3 or 5 mm) or joist L adapter • STANDARD pedestal 120-220

STANDARD series

STANDARD pedestals

STANDARD pedestal **220-320**





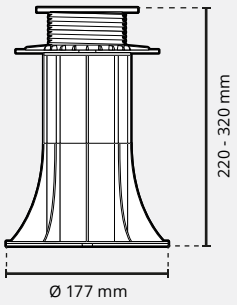

Name	STANDARD pedestal 220-320
Application	• terrace with tiles • terrace with decking
Short name	STANDARD 220-320
Code	**For tiles** • spacer 3 mm: **10749** + **10038** • spacer 5 mm: **104204** + **10038** **For decking** • joist L adapter: **10035** + **10038**
Pedestal height range	**220 - 320** mm
Height adjustment	smooth
Pedestal dimensions	177 × 177 × (220 - 320) mm
Pedestal load capacity	1100 kg
Material	plastic
Colour	black with grey screw nut
Where to use	• external decking • interior raised floors
Subsurface	• hard subsurface • sensitive subsurface • sloped surface
Included	• tile cross spacer (3 or 5 mm) or joist L adapter • STANDARD pedestal 120-220 • height coupler DS100

STANDARD pedestal **320-420**





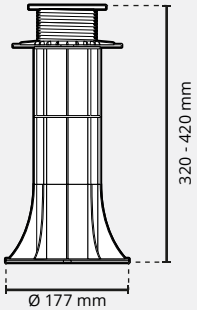

Name	STANDARD pedestal 320-420
Application	• terrace with tiles • terrace with decking
Short name	STANDARD 320-420
Code	**For tiles** • spacer 3 mm: • **10749** + 2× **10038** • spacer 5 mm: **104204** + 2× **10038** **For decking** • joist L adapter: **10035** + 2× **10038**
Pedestal height range	**320 - 420** mm
Height adjustment	smooth
Pedestal dimensions	177 × 177 × (320 - 420) mm
Pedestal load capacity	1100 kg
Material	plastic
Colour	black with grey screw nut
Where to use	• external decking • interior raised floors
Subsurface	• hard subsurface • sensitive subsurface • sloped surface
Included	• tile cross spacer (3 or 5 mm) or joist L adapter • STANDARD pedestal 120-220 • height coupler DS100 (2 pcs.)

STANDARD Series **accessories**

Image	Name	Where to use	Short name	Code	Dimensions a - length b - width h - height	Example of application
	**Cross spacer 3 mm**	Use to create a standard grid gap between tiles with 3 mm width.	K3	10800	a - 60 mm b - 60 mm h - 12 mm	
	**Cross spacer 5 mm**	Use to create a standard grid gap between tiles with 5 mm width.	K5	10801	a - 60 mm b - 60 mm h - 12 mm	
	**Joist adapter**	Helps to fix decking joist to the pedestal.	AD	10000	a - 85 mm b - 15 mm h - 28 mm	
	**Gap spacer 3 mm**	Individual gap spacers are used to helps to create non grid joints between tiles e.g. along the walls.	L3	10167	a - 1 mm b - 3 mm h - 11 mm	
	**Gap spacer 5 mm**	Individual gap spacers are used to helps to create non grid joints between tiles e.g. along the walls.	L5	10168	a - 16 mm b - 5 mm h - 15 mm	

STANDARD series

STANDARD Series **accessories**

Image	Name	Where to use	Short name	Code	Dimensions a - length b - width h - height	Example of application
	**Rubber shim SH100 1,5 mm**	Noise cancellation and tile thickness compensation. Gives additional height of 1,5 mm.	SH100	10399	a - 100 mm b - 100 mm h - 1,5 mm	
	**Self leveling head LE 0-7% 16 mm height**	Self leveling of theterrace with a slope range from 0% to 7%. Gives additional height of 16 mm.	LE	10170	a - 110 mm b - 110 mm h - 16 mm	
	**Up to wall clip**	Use to create a gap between perimeter tile and wall. Prevent tiles displacement and makes a spare space for tiles thermal expansion. Gives additional height of 2,5 mm.	DDPWAP	104368	a - 189 mm b - 100 mm h - 2,5 mm	
	**Edge clip upper**	Use to make vertical closure of the gap under the tiles.	DDPEDU	10040	a - 152 mm b - 100 mm h - 0,7 mm	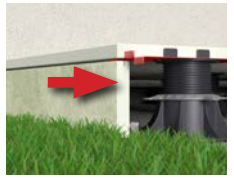
	**Edge clip lower**	Use to make vertical closure of the gap under the tiles.	DDPEDL	10039	a - 50 mm b - 75 mm h - 0,7 mm	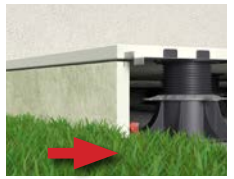

STANDARD series

STANDARD Series **accessories**

Image	Name	Where to use	Short name	Code	**Dimensions** a - length b - width h - height	**Example of application**
	**Side finishing closure plate**	It is used to make vertical masking of the ventilated terrace. Two pieces increase the height of the bracket by 7 mm.	DDP CP	103741	a - 257 mm b - 257 mm h - 3,5 mm	
	**Height coupler 100 mm**	Height coupler allows to extend pedestal height with additional 100 mm.	DS100	10038	a - 93 mm b - 93 mm h - 100 mm	
	**SBR rubber pad SBR200, 3 mm**	Placed under the pedestal gives additional protection of the water membrane. Also gives additional noise cancellation. Gives additional height of 3 mm.	SBR 200/3	102557	a - 200 mm b - 200 mm h - 3 mm	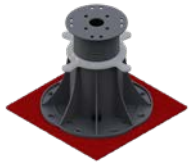
	**SBR rubber pad SBR200, 8 mm**	Placed under the pedestal gives additional protection of the water membrane. Also gives additional noise cancellation. Gives additional height of 8 mm.	SBR 200/8	102559	a - 200 mm b - 200 mm h - 8 mm	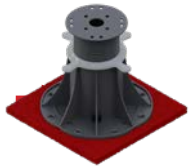
	**Drill driver bit tool**	Helps with fast height adjustment of the pedestals. To use drill driver is needed.	-	107471	a - 62 mm b - 62 mm h - 57 mm	

STANDARD series

Joist supports for **anchor foundation**

On the soil terraces

Adjustable joist supports for anchor foundation is a stable and everlasting support for decking joists. Terraces supported on them are resistent for rotting due to that joist is not lay on the soil directly.
With a smooth height adjustment it is possible to make terrace on any desired height. Using adjustable height supports on the anchor foundation reduce costs of making a full concrete bed under the terrace. Additional advantage is that it keeps water drainage.



Environment friendly solution

Terraces supported with adjustable height anchor foundation unlike traditional concrete bed terraces allows for water drainage and do not interfere sorroundings rainwater flow.

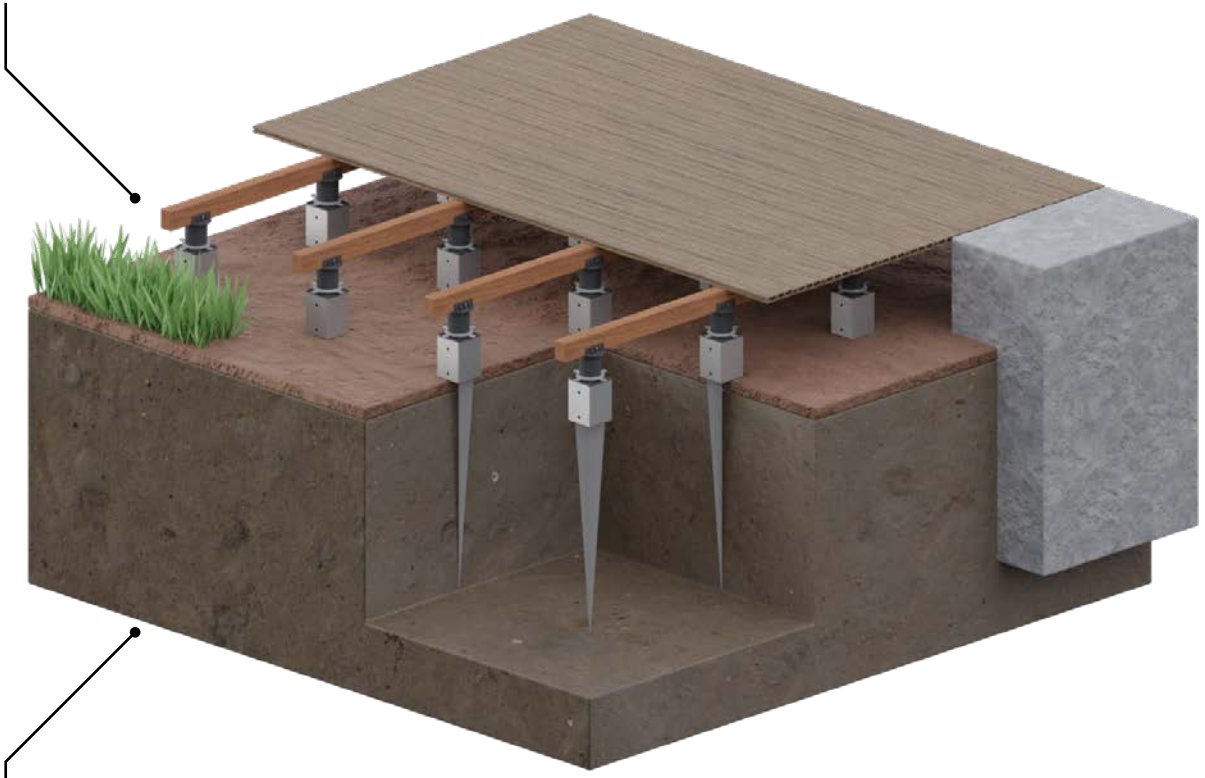

Subsurface

Adjustable height joist supports mounted on anchor foundation are allowed to be use directly to soil.



STANDARD series

Joist supports for **anchor foundation**

Pedestal construction

Adjustable height joist support placed in anchor foundation provide stable connection.

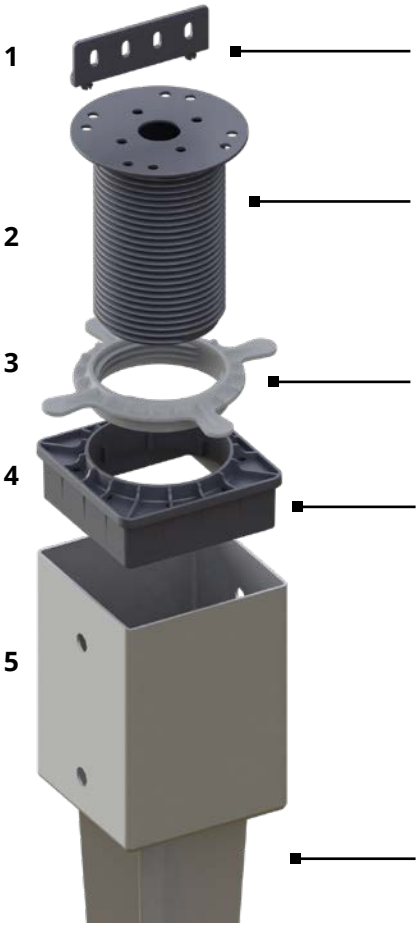

1. Joist adapter
Joist adapter to with decks.

2. Screw
Pedestal head where joist adapter can be assembled.

3. Screw nut
Screw nut is used to smooth height adjustment of the joist support pedestal.

4. Joist support to use with anchor foundation
Adapter to use with adjustable height joist support placed on metal anchor foundation.

5. Metal anchor foundation 160 mm (total length is 1000 mm)
Allows to placed directly in dirt.

Smooth height adjustment

Adjustable height joist support for anchor foundation 25 mm (height adjustment 100 mm) allows for a smooth height adjustment with a rotating screw nut.

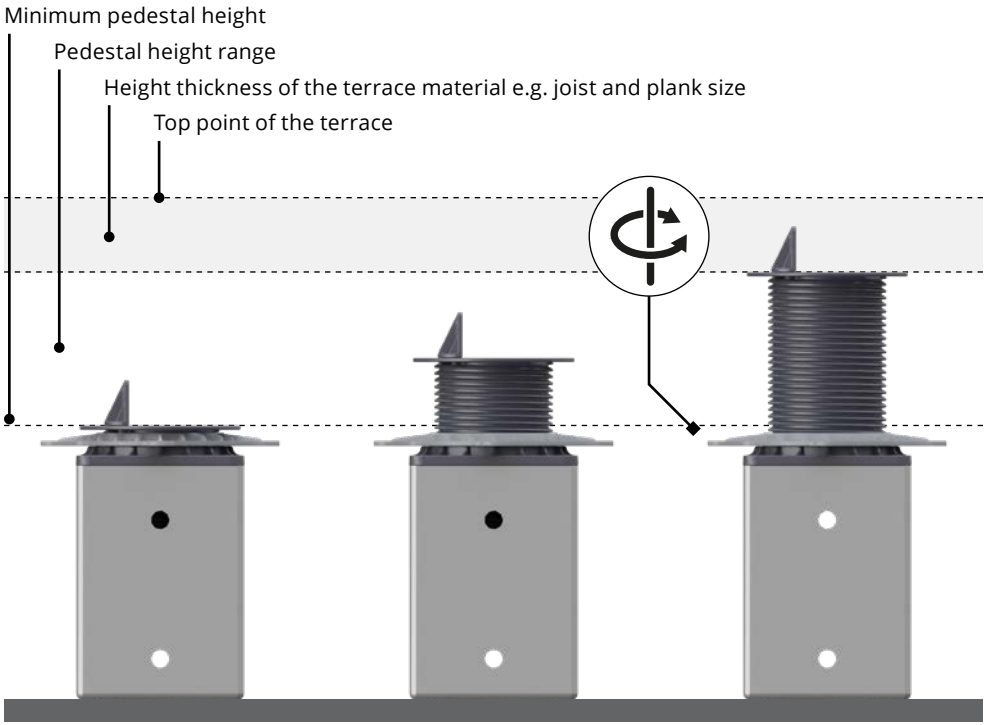



STANDARD series

Joist supports for **anchor foundation**

Adjustable deck joist support for anchor foundation with height adjustment 100 mm





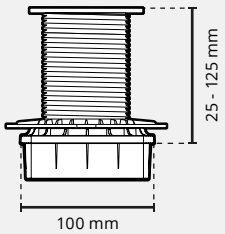

Name	Adjustable deck joist support for anchor foundation with height adjustment 100 mm
Application	• terrace with decking
Short name	DDPRPL
Code	102356
Pedestal height range	**0 - 100** mm
Height adjustment	smooth
Pedestal dimensions	100 × 100 × (25 - 125) mm
Pedestal load capacity	1100 kg
Material	plastic
Colour	black with grey screw nut
Where to use	• exterior decking on groundfloor
Subsurface	• hard soil
Included	• adapter • adjustable deck joist support 100 mm for anchor foundation

Metal anchor foundation 160 mm (total length 1000 mm)





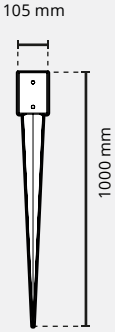

Name	Metal anchor foundation 160 mm (total length 1000 mm)
Application	• terrace with decking
Short name	DDPMFW
Code	102355
Height above the ground	**160** mm
Dimensions	105 × 105 × 1000 mm
Material	steel
Colour	silver
Where to use	• exterior decking on groundfloor
Subsurface	• hard soil
Included	• metal anchor foundation



enviro lift

MAX

SERIES

Smooth height adjustment from **45** to **950** mm

MAX series

Where to use

Professional terraces

Adjustable height pedestals MAX Series is a most advanced and most durable of all our pedestals. Pedestal base and head has a wide diameter which allows for a stable support. Unique double screw gives twice bigger height range with each pedestals. With this unique solution you can reach most popular heights on the projects with only 3 pedestals types. Well designed pedestals construction gives a lot of advantages that makes MAX Series pedestals ready to be used on most advanced requirements projects. MAX Series has a wide range of additional accessories.

Slope correction

8% slope corrector
6% self leveling head

Wide height range

Pedestal with a big height range

For professional contractors

Pedestals resistant to high loads

Wind uplift solution

MAX Series has a solution for winduplift

Stable construction

Possibility for additional stabilisation with wires.

TILE TERRACE



Tile terrace

Using a spacer disc creates joint between tiles. Choose between 3 and 5 mm spacers.

DECKING TERRACE



Decking terrace

Decking joists on the pedestals. Using joist adapter allows to screw them togheter. It is possible to use joist made of wood, WPC, aluminium.

MAX series

Pedestal **design**

Pedestal construction

MAX Series pedestal were designed for a terraces that must be resistant for high loads.

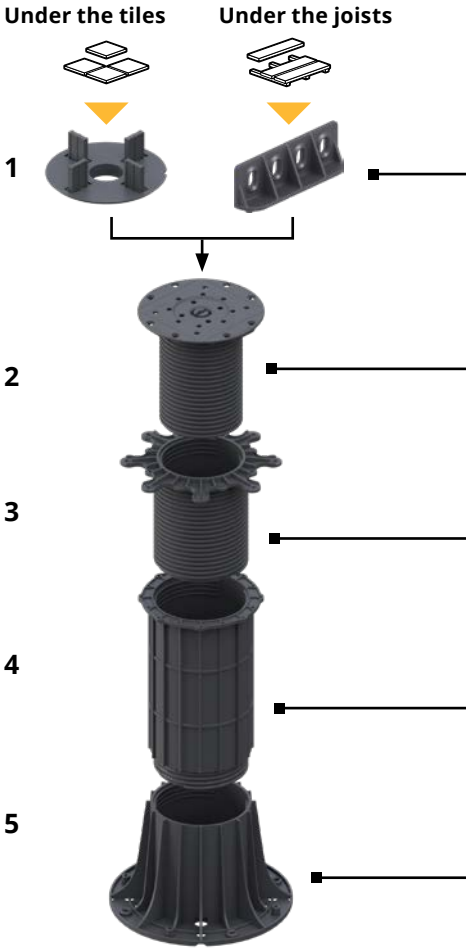

1. Spacer disc or Joist adapter
Spacer disc to use with tiles, Joist adapter to use with decking joists.

2. Pedestal head with a screw
Wide pedestal head gives a stable support for terrace.

3. Screwnut
Screwnut allows for smooth height pedestal adjustment.

4. Height coupler
Height coupler extend pedestal height range with additional 200 mm.

5. Pedestal base
Stable pedestal base with side ribs making pedestal stronger.

Smooth height adjustment

MAX Series pedestals allows for a smooth height adjustment with rotating screwnut. Additionaly there is possibility to adjust height after terrace is installed with a height adjustment key from the top.

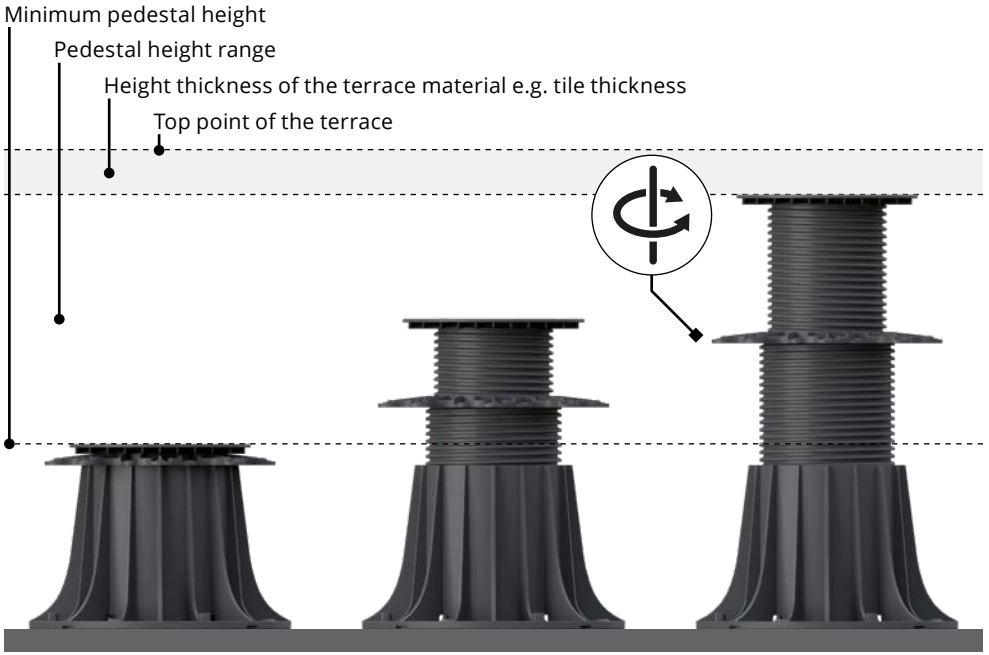

Deck



Terrace tiles



MAX series

Advantages

1

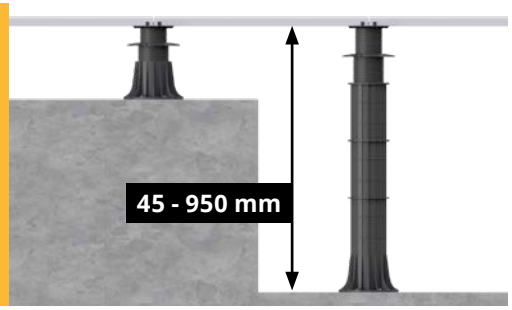

Big heights

Wide height range of the MAX pedestals allows to install stable and high terraces. It is also possible to create a flat surface terrace where is huge difference of levels.

2

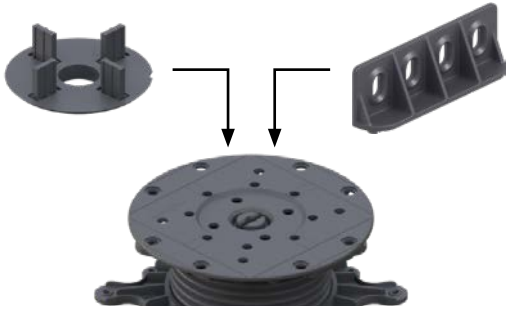

For tiles and decking

Pedestal head allows to mount a spacer disc or joist adapter. It makes MAX pedestals ready to use for tile and decking. With this advantage each pedestal can be used on different projects types.

3

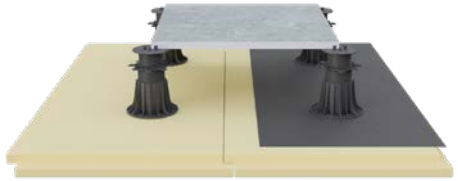

Bottom layer

MAX pedestals can be used on all types of basis even these with a water membrane protection or XPS. Our recommended minimum hardness for stable usage is 300 kPa.

4



For sloped areas

MAX pedestals can be used on a very sloped surfaces. With using a slope corrector and self leveling simultaneously give in total 14% slope correction possiblilty.

5

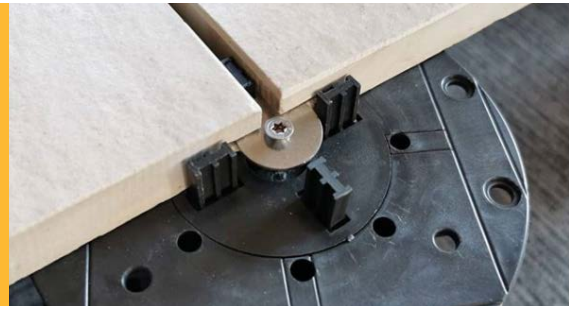

Wind uplift prevention

Tiles supported with MAX pedestals can be fixed permanently with a windproof solution.

6

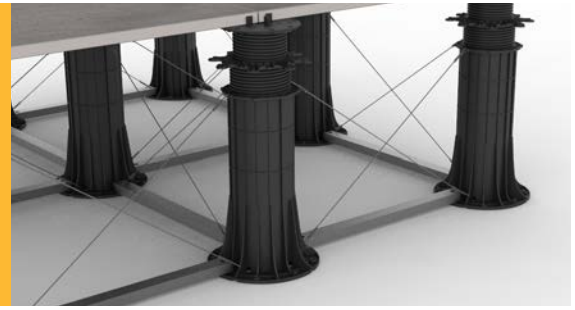

Additional stabilization

Additional stabilizing the structure of the terrace with profiles and tensions cross bracing.

MAX series pedestals



FOR TILES

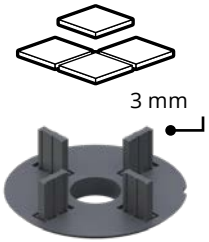

Spacer disc
3 mm
joint width 3 mm

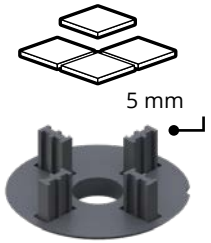

Spacer disc
5 mm
joint width 5 mm

FOR DECKING JOISTS



Joist adapter
for timber joists, composite
WPC, aluminium

MAX Series - height range from 45 - 950 mm.

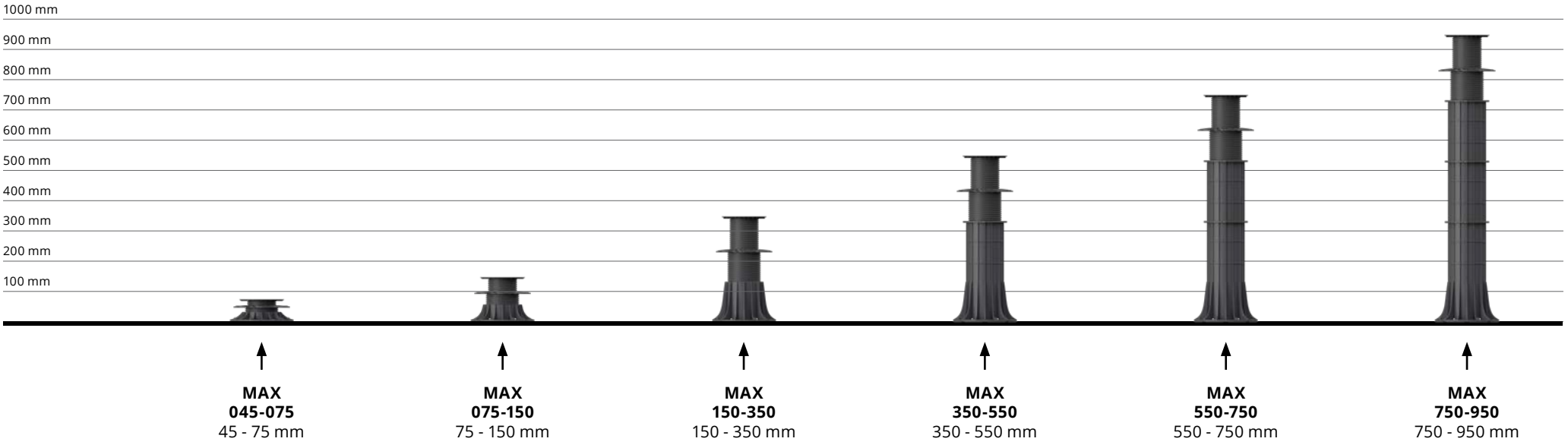

MAX series pedestals

MAX pedestal **045-075**



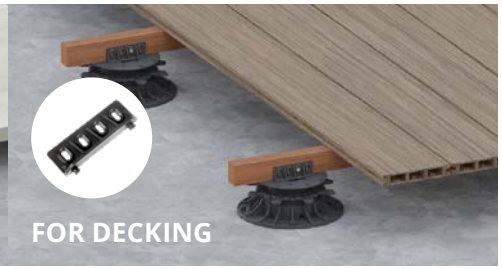



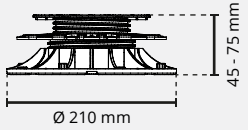

Name	MAX pedestal 045-075
Application	• terrace with tiles • terrace with decking
Short name	MAX 045-075
Code	For tiles • spacer 3 mm: **10751** • spacer 5 mm: **107479** For decking • joist L adapter: **107587**
Pedestal height range	**45 - 75** mm
Height adjustment	smooth
Pedestal dimensions	210 × 210 × (45 - 75) mm
Pedestal load capacity	1700 kg
Material	plastic
Colour	black
Where to use	• external decking • interior raised floors
Subsurface	• hard subsurface • sensitive subsurface • sloped surface
Included	• joist adapter or gap spacers (3 or 5 mm) • MAX pedestal 045-075

MAX pedestal **075-150**



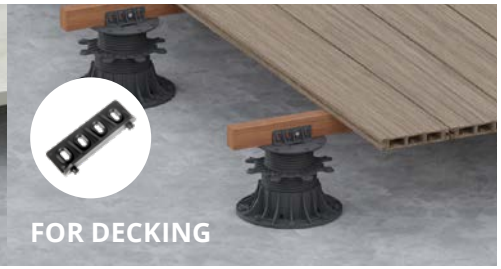



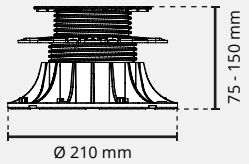

Name	MAX pedestal 075-150
Application	• terrace with tiles • terrace with decking
Short name	MAX 075-150
Code	For tiles • spacer 3 mm: **10752** • spacer 5 mm: **107480** For decking • joist L adapter: **107586**
Pedestal height range	**75 - 150** mm
Height adjustment	smooth
Pedestal dimensions	210 × 210 × (75 - 150) mm
Pedestal load capacity	1700 kg
Material	plastic
Colour	black
Where to use	• external decking • interior raised floors
Subsurface	• hard subsurface • sensitive subsurface • sloped surface
Included	• joist adapter or gap spacers (3 or 5 mm) • MAX pedestal 075-150

MAX series pedestals

MAX pedestal **150-350**



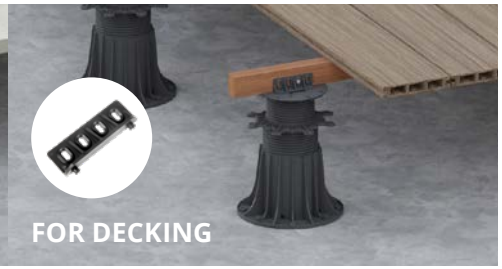



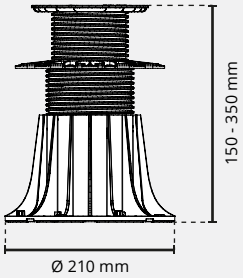

Name	MAX pedestal 150-350
Application	• terrace with tiles • terrace with decking
Short name	**MAX 150-350**
Code	**For tiles** • spacer 3 mm: **10665** • spacer 5 mm: **10666** **For decking** • joist L adapter: **10669**
Pedestal height range	**150 - 350** mm
Height adjustment	smooth
Pedestal dimensions	210 × 210 × (150 - 350) mm
Pedestal load capacity	1700 kg
Material	plastic
Colour	black
Where to use	• external decking • interior raised floors
Subsurface	• hard subsurface • sensitive subsurface • sloped surface
Included	• joist adapter or gap spacers (3 or 5 mm) • MAX pedestal 150-350

MAX pedestal **350-550**







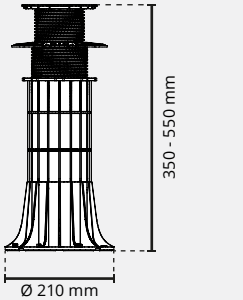

Name	MAX pedestal 350-550
Application	• terrace with tiles • terrace with decking
Short name	**MAX 350-550**
Code	**For tiles** • spacer 3 mm: **10665** + **10679** • spacer 5 mm: **10666** + **10679** **For decking** • joist L adapter: **10669** + **10679**
Pedestal height range	**350 - 550** mm
Height adjustment	smooth
Pedestal dimensions	210 × 210 × (350 - 550) mm
Pedestal load capacity	1700 kg
Material	plastic
Colour	black
Where to use	• external decking • interior raised floors
Subsurface	• hard subsurface • sensitive subsurface • sloped surface
Included	• joist adapter or gap spacers (3 or 5 mm) • MAX pedestal 150-350 • height coupler DS200

MAX series pedestals

MAX pedestal **550-750**







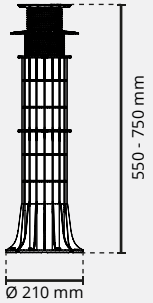

Name	MAX pedestal 550-750
Application	• terrace with tiles • terrace with decking
Short name	MAX 550-750
Code	**For tiles** • spacer 3 mm: **10665** + 2× **10679** • spacer 5 mm: **10666** + 2× **10679** **For decking** • joist L adapter: **10669** + 2× **10679**
Pedestal height range	**550 - 750** mm
Height adjustment	smooth
Pedestal dimensions	210 × 210 × (550 - 750) mm
Pedestal load capacity	1700 kg
Material	plastic
Colour	black
Where to use	• external decking • interior raised floors
Subsurface	• hard subsurface • sensitive subsurface • sloped surface
Included	• joist adapter or gap spacers (3 or 5 mm) • MAX pedestal 150-350 • height coupler DS200 (2 pcs.)

MAX pedestal **750-950**







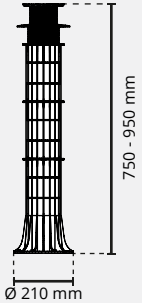

Name	MAX pedestal 750-950
Application	• terrace with tiles • terrace with decking
Short name	MAX 750-950
Code	**For tiles** • spacer 3 mm: **10665** + 3× **10679** • spacer 5 mm: **10666** + 3× **10679** **For decking** • joist L adapter: **10669** + 3× **10679**
Pedestal height range	**750 - 950** mm
Height adjustment	smooth
Pedestal dimensions	210 × 210 × (750 - 950) mm
Pedestal load capacity	1700 kg
Material	plastic
Colour	black
Where to use	• external decking • interior raised floors
Subsurface	• hard subsurface • sensitive subsurface • sloped surface
Included	• joist adapter or gap spacers (3 or 5 mm) • MAX pedestal 150-350 • height coupler DS200 (3 pcs.)

MAX Series **accessories**

Image	Name	Where to use	Short name	Code	**Dimensions** a - length b - width h - height	**Example of application**
	**Gap spacer 3 mm**	Gap spacers makes 3 mm joint gap between tiles.	D3	10441	a - 65 mm b - 65 mm h - 14 mm	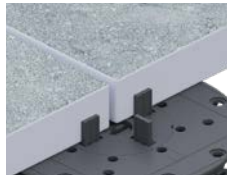
	**Gap spacer 5 mm**	Gap spacers makes 5 mm joint gap between tiles.	D5	10440	a - 65 mm b - 65 mm h - 14 mm	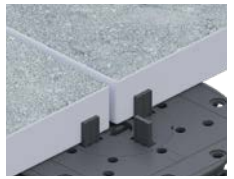
	**Joist adapter**	Helps to fix decking joist to the pedestal.	AD	10000	a - 85 mm b - 15 mm h - 28 mm	
	**Gap spacer 3 mm**	Individual gap spacers are used to helps to create non grid joints between tiles e.g. along the walls.	L3	10167	a - 1 mm b - 3 mm h - 11 mm	
	**Gap spacer 5 mm**	Individual gap spacers are used to helps to create non grid joints between tiles e.g. along the walls.	L5	10168	a - 16 mm b - 5 mm h - 15 mm	

MAX Series **accessories**

Image	Name	Where to use	Short name	Code	Dimensions a - length b - width h - height	Example of application
	**Rubber shim SH145 1,5 mm**	Noise cancellation and tile thickness compensation. Gives additional height of 1,5 mm.	SH145	10314	a - 145 mm b - 145 mm h - 1,5 mm	
	**Height coupler 200 mm**	Height coupler allows to extend pedestal height with additional 200 mm.	DS200	10679	a - 144 mm b - 144 mm h - 200 mm	
	**Self leveling head LE MAX 0-6% 20 mm height**	Self leveling of theterrace with a slope range from 0% to 6%. Gives additional height of 20 mm.	LE MAX	10680	a - 157 mm b - 157 mm h - 20 mm	
	**Base slope corrector 0-8%, 30,5 mm height**	Base slope corrector helps to compensate slope of the terrace and makes pedestal stay vertical even if stayingo on uneven sloped surface. Gives additional height of the pedestals 30,5 mm.	SC	10681	a - 250 mm b - 250 mm h - 30,5 mm	
	**Up to wall clip**	Use to create a gap between perimeter tile and wall. Prevent tiles displacement and makes a spare space for tiles thermal expansion. Gives additional height of 2,5 mm.	DDPWAP	104368	a - 189 mm b - 100 mm h - 2,5 mm	

MAX Series **accessories**

Image	Name	Where to use	Short name	Code	Dimensions a - length b - width h - height	Example of application
	**Edge clip upper MAX**	Use to make vertical closure of the gap under the tiles.	DDPEDU MAX	1043728	a - 214 mm b - 100 mm h - 0,7 mm	
	**Edge clip lower**	Use to make vertical closure of the gap under the tiles.	DDPEDL	10039	a - 50 mm b - 75 mm h - 0,6 mm	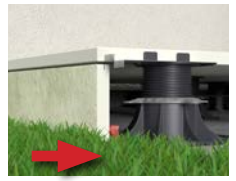
	**Drill driver bit tool**	Helps with fast height adjustment of the pedestals. To use drill driver is needed.	PPK	107471	a - 62 mm b - 62 mm h - 57 mm	
	**Key from the top**	Helps to make small adjustments after tiles installation. WARNING! Use only with self leveling head. User cannot stay on the tiles that is laying on the pedestal which height is regulated.	MPK	10744	a - 155 mm b - 121 mm h - 8 mm	
	**SBR rubber pad SBR220, 3 mm**	Placed under the pedestal gives additional protection of the water membrane. Also gives additional noise cancellation. Gives additional height of 3 mm.	SBR 220/3	10414	a - 220 mm b - 220 mm h - 3 mm	

MAX Series **accessories**

Image	Name	Where to use	Short name	Code	Dimensions a - length b - width h - height	Example of application
	**Windproof system**	System that helps to mechanically fix tiles to the pedestal in case of a high wind exposure. Using that system needs to cut a kerf on the tiles corner edges.	WP	102354	- - -	
	**Side finishing closure plate**	It is used to make vertical masking of the ventilated terrace. Two pieces increase the height of the bracket by 7 mm.	DDP CP	103741	a - 257 mm b - 257 mm h - 3,5 mm	

MAX pedestals with decking terrace



MAX pedestals with tile terrace



enviro lift

ALU

SERIES

ALU Series pedestals specifically designed for high-rise buildings where **high fire resistance** is demanded.



ALU Series

Where to use

Professional usage

The pedestals have a huge weight tolerance.

Can be used on commercial projects that need to meet a fire classification of construction products & building elements. Steel / Aluminium material with a high weight resistance. Height adjustable with a range from 40 up to 200 mm.

ALU Series has a built in self-levelling head. This self levelling head allows to achieve a completely flat surface without any additional accessories.

Fully non-combustible

Made from 100% class A1 material - steel and aluminium.

Self-levelling

Self-levelling up to 6% without additional accessories.

Height adjustment

Smooth height adjustment.

Durability

Made of steel and aluminium without plastic or rubber elelemnts.

High weight resistance

Pedestals has a huge weight tolerance (2000 kg).

PAVING TILES



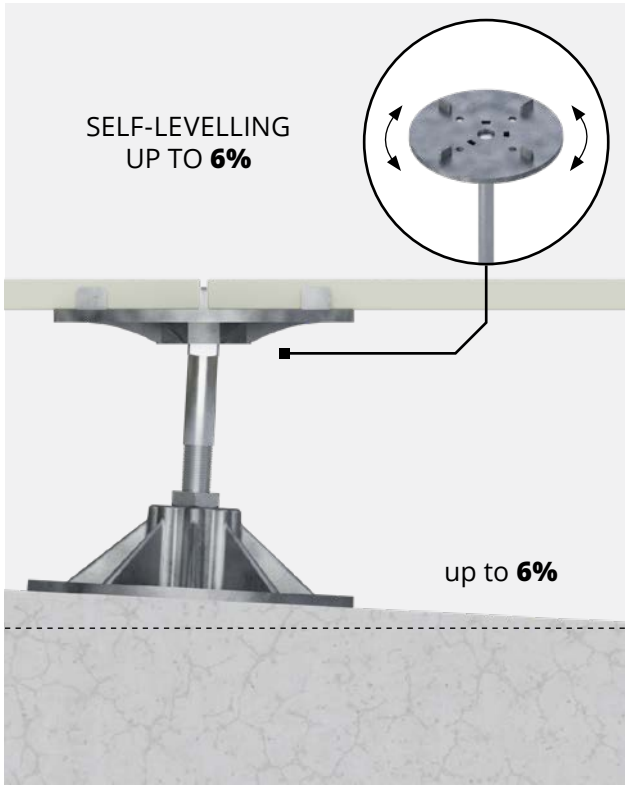

Paving tiles

ALU Series has built in 1/8 (3mm) spacers.

ALU Series

Pedestal **design**

Consists of

ALU Series pedestals were designed for high demand exterior applications and fire resistance.

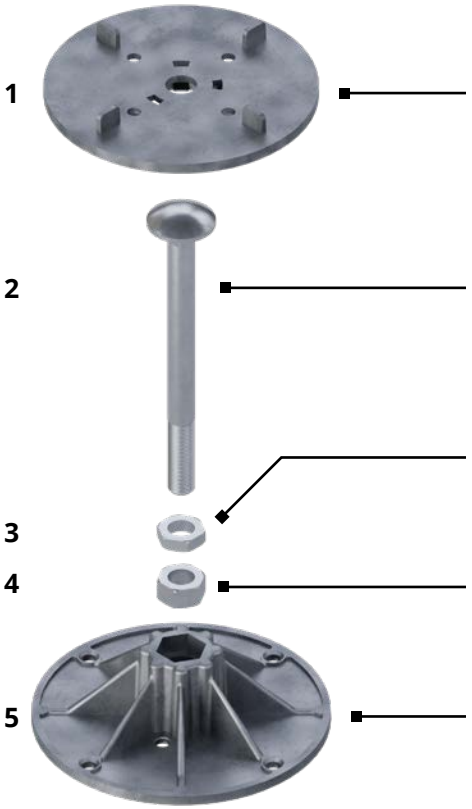

1. Head
Pedestal head gives a support for paving tiles. 3 mm built in lugs included.

2. Screw
Threaded screw with a self levelling pin.

3. Low height locking nut
Locking nut fix threaded screw and avoid unscrew.

4. Base screw nut
Base screw nut that allows for a height adjustment.

5. Base
Pedestal base with additional ribs for construction strengthening.

Smooth height adjustment

ALU Series pedestals have a smooth height adjustment.

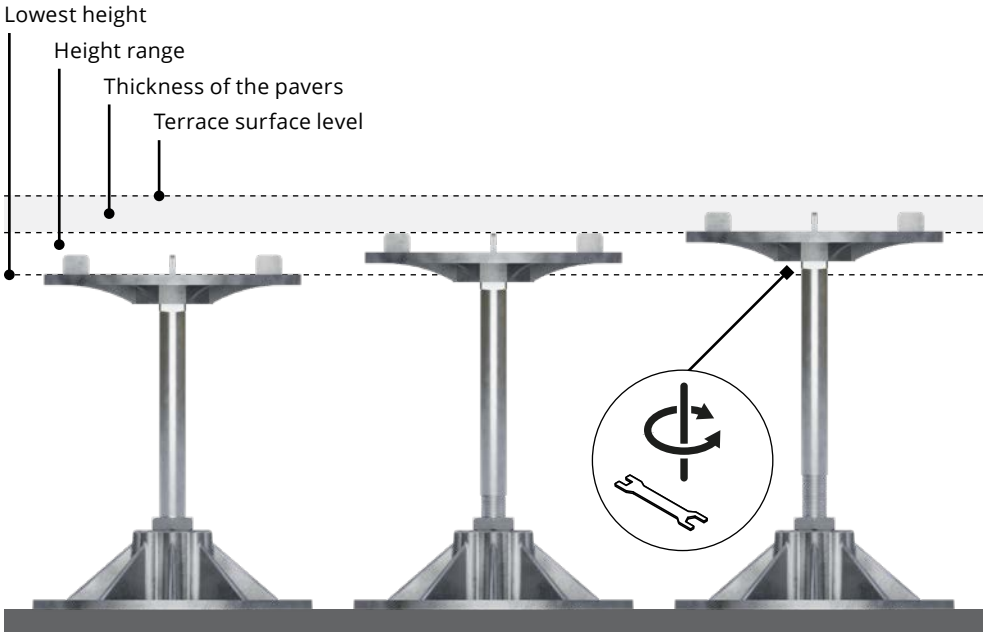

Paving tiles



ALU Series

Advantages

1



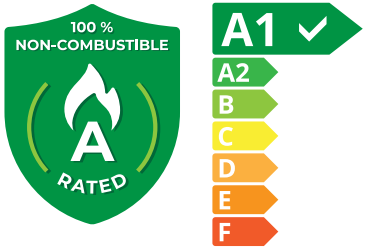

Fire resistance

The structure of the pedestals is made entirely of fireproof materials, safety class EURO A1.
The pedestals have no plastic or rubber elements.

2

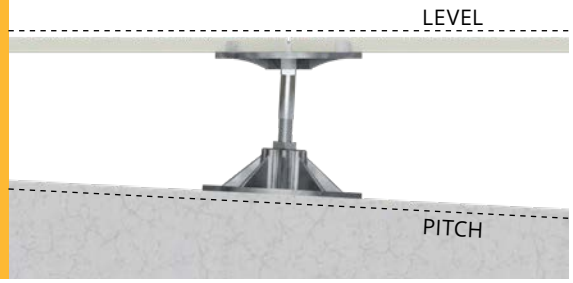

Self levelling

ALU pedestals have a built-in self-levelling head. They automatically level slopes up to 6%. Self-leveling is carried out in all directions without the use of additional accessories.

3

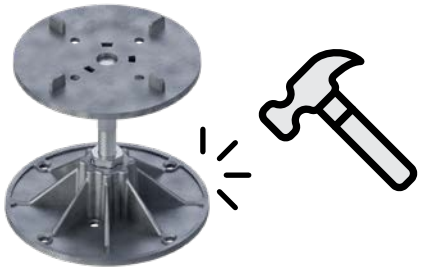

Durability

ALU pedestals are resistant to mechanical damage and cracks. They are also resistant to chemical agents. They are used in places with particularly heavy pedestrian traffic.

4

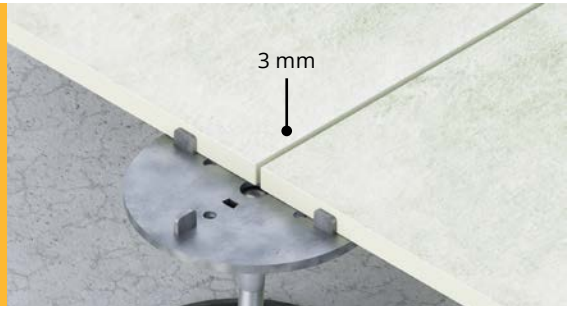

Gap space

ALU pedestals have built in spacer lugs which creates a 3 mm gap between tiles.

5

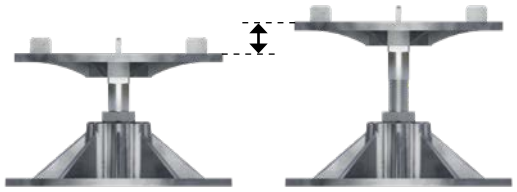

Smooth height adjustment

Smooth height adjustment allows for a precise height adjustment in a range between 40-200 mm.

6



High weight resistance

The ALU Series is characterized by a very high load capacity factor. The wide base prevents point loads on the ground, ensuring proper distribution of the terrace weight.

ALU series pedestals



FOR TILES

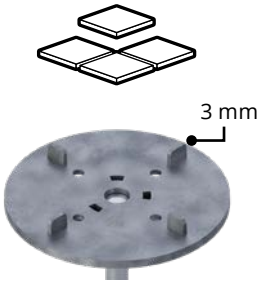

Built in spacer lugs
Gap spacers width 3 mm

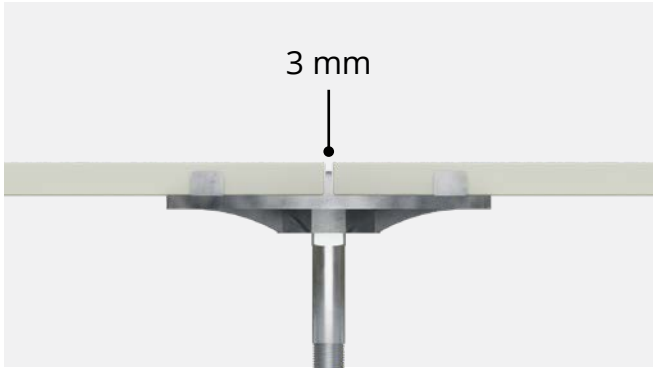

ALU Series - height from **40** up to **200** mm

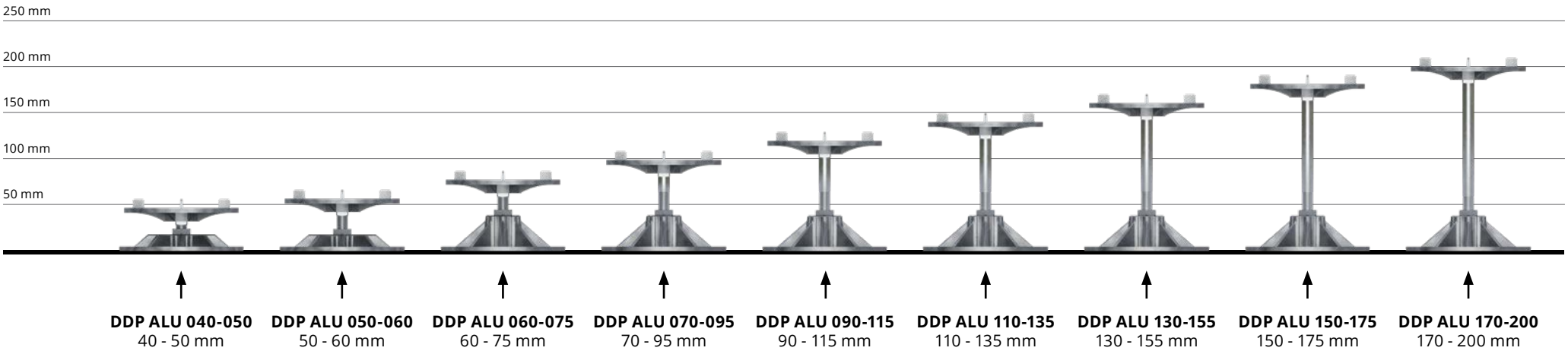

ALU series pedestals

Non combustible pedestal **ALU 040-050**





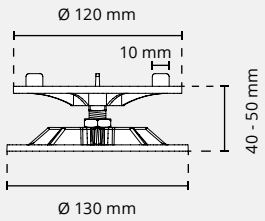

Name	Non combustible pedestal ALU 040-050
Application	• for tiles
Short name	**DDP ALU 040-050**
Code	• spacer 3 mm: **10991**
Pedestal height range	**40 - 50** mm
Height adjustment	smooth
Self levelling	up to 6%
Pedestal dimensions	130 × 130 × (40 - 50) mm
Pedestal load capacity	2000 kg
Material	aluminium, steel
Resistance class	EUROCLASS A1 PN-EN 13501-1 BS-EN 13501-1
Colour	Metal silver
Where to use	• external decking application • interior raised floors
Subsurface	• hard subsurface • sensitive subsurface (with protection pad) • sloped surface
Included	• Gap spacers 3 mm • Non combustible pedestal ALU 040-050

Non combustible pedestal **ALU 050-060**





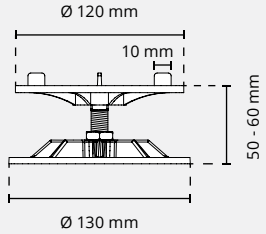

Name	Non combustible pedestal ALU 050-060
Application	• for tiles
Short name	**DDP ALU 050-060**
Code	• spacer 3 mm: **10992**
Pedestal height range	**50 - 60** mm
Height adjustment	smooth
Self levelling	up to 6%
Pedestal dimensions	130 × 130 × (50 - 60) mm
Pedestal load capacity	2000 kg
Material	aluminium, steel
Resistance class	EUROCLASS A1 PN-EN 13501-1 BS-EN 13501-1
Colour	Metal silver
Where to use	• external decking application • interior raised floors
Subsurface	• hard subsurface • sensitive subsurface (with protection pad) • sloped surface
Included	• Gap spacers 3 mm • Non combustible pedestal ALU 050-060

ALU series pedestals

Non combustible pedestal **ALU 060-075**





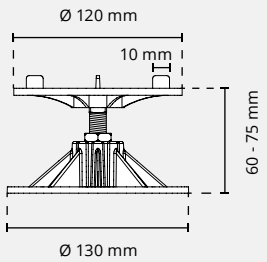

Name	Non combustible pedestal ALU 060-075
Application	• for tiles
Short name	**DDP ALU 060-075**
Code	• spacer 3 mm: **10993**
Pedestal height range	**60** - **75** mm
Height adjustment	smooth
Self levelling	up to 6%
Pedestal dimensions	130 × 130 × (60 - 75) mm
Pedestal load capacity	2000 kg
Material	aluminium, steel
Resistance class	EUROCLASS A1 PN-EN 13501-1 BS-EN 13501-1
Colour	Metal silver
Where to use	• external decking application • interior raised floors
Subsurface	• hard subsurface • sensitive subsurface (with protection pad) • sloped surface
Included	• Gap spacers 3 mm • Non combustible pedestal ALU 060-075

Non combustible pedestal **ALU 070-095**





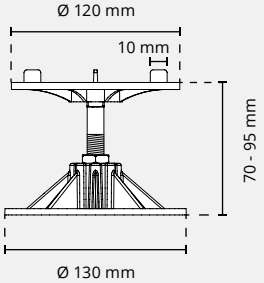

Name	Non combustible pedestal ALU 070-095
Application	• for tiles
Short name	**DDP ALU 070-095**
Code	• spacer 3 mm: **10994**
Pedestal height range	**70** - **95** mm
Height adjustment	smooth
Self levelling	up to 6%
Pedestal dimensions	130 × 130 × (70 - 95) mm
Pedestal load capacity	2000 kg
Material	aluminium, steel
Resistance class	EUROCLASS A1 PN-EN 13501-1 BS-EN 13501-1
Colour	Metal silver
Where to use	• external decking application • interior raised floors
Subsurface	• hard subsurface • sensitive subsurface (with protection pad) • sloped surface
Included	• Gap spacers 3 mm • Non combustible pedestal ALU 070-095

ALU Series

ALU series pedestals

Non combustible pedestal **ALU 090-115**





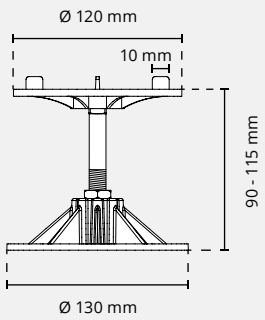

Name	Non combustible pedestal ALU 090-115
Application	• for tiles
Short name	**DDP ALU 090-115**
Code	• spacer 3 mm: **10995**
Pedestal height range	**90 - 115** mm
Height adjustment	smooth
Self levelling	up to 6%
Pedestal dimensions	130 × 130 × (90 - 115) mm
Pedestal load capacity	2000 kg
Material	aluminium, steel
Resistance class	EUROCLASS A1 PN-EN 13501-1 BS-EN 13501-1
Colour	Metal silver
Where to use	• external decking application • interior raised floors
Subsurface	• hard subsurface • sensitive subsurface (with protection pad) • sloped surface
Included	• Gap spacers 3 mm • Non combustible pedestal ALU 090-115

Non combustible pedestal **ALU 110-135**





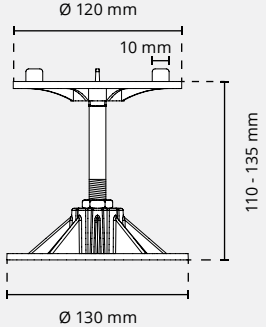

Name	Non combustible pedestal ALU 110-135
Application	• for tiles
Short name	**DDP ALU 110-135**
Code	• spacer 3 mm: **10996**
Pedestal height range	**110 - 135** mm
Height adjustment	smooth
Self levelling	up to 6%
Pedestal dimensions	130 × 130 × (110 - 135) mm
Pedestal load capacity	2000 kg
Material	aluminium, steel
Resistance class	EUROCLASS A1 PN-EN 13501-1 BS-EN 13501-1
Colour	Metal silver
Where to use	• external decking application • interior raised floors
Subsurface	• hard subsurface • sensitive subsurface (with protection pad) • sloped surface
Included	• Gap spacers 3 mm • Non combustible pedestal ALU 110-135

ALU series pedestals

Non combustible pedestal **ALU 130-155**





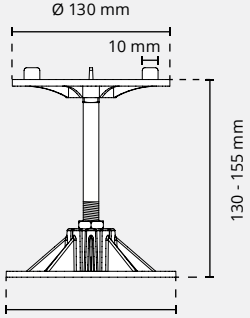

Name	Non combustible pedestal ALU 130-155
Application	• for tiles
Short name	**DDP ALU 130-155**
Code	• spacer 3 mm: **10997**
Pedestal height range	**130 - 155** mm
Height adjustment	smooth
Self levelling	up to 6%
Pedestal dimensions	130 × 130 × (130 - 155) mm
Pedestal load capacity	2000 kg
Material	aluminium, steel
Resistance class	EUROCLASS A1 PN-EN 13501-1 BS-EN 13501-1
Colour	Metal silver
Where to use	• external decking application • interior raised floors
Subsurface	• hard subsurface • sensitive subsurface (with protection pad) • sloped surface
Included	• Gap spacers 3 mm • Non combustible pedestal ALU 130-155

Non combustible pedestal **ALU 150-175**





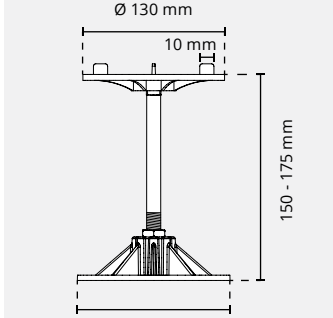

Name	Non combustible pedestal ALU 150-175
Application	• for tiles
Short name	**DDP ALU 150-175**
Code	• spacer 3 mm: **10998**
Pedestal height range	**150 - 175** mm
Height adjustment	smooth
Self levelling	up to 6%
Pedestal dimensions	130 × 130 × (150 - 175) mm
Pedestal load capacity	2000 kg
Material	aluminium, steel
Resistance class	EUROCLASS A1 PN-EN 13501-1 BS-EN 13501-1
Colour	Metal silver
Where to use	• external decking application • interior raised floors
Subsurface	• hard subsurface • sensitive subsurface (with protection pad) • sloped surface
Included	• Gap spacers 3 mm • Non combustible pedestal ALU 150-175

ALU series pedestals

Non combustible pedestal **ALU 170-200**





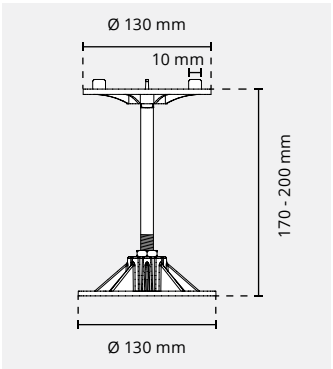

Name	Non combustible pedestal ALU 170-200
Application	• for tiles
Short name	**DDP ALU 170-200**
Code	• spacer 3 mm: **10999**
Pedestal height range	**170 - 200** mm
Height adjustment	smooth
Self levelling	up to 6%
Pedestal dimensions	130 × 130 × (170 - 200) mm
Pedestal load capacity	2000 kg
Material	aluminium, steel
Resistance class	EUROCLASS A1 PN-EN 13501-1 BS-EN 13501-1
Colour	Metal silver
Where to use	• external decking application • interior raised floors
Subsurface	• hard subsurface • sensitive subsurface (with protection pad) • sloped surface
Included	• Gap spacers 3 mm • Non combustible pedestal ALU 170-200

enviro lift

ACCESSORIES

FOR PEDESTALS

Additional elements that increase the **functionality** of the pedestals



Accessories for pedestals

Side finishing closure plate

FITS THE SPIRAL, STANDARD AND MAX SERIES

Masking the vertical edge of the raised terrace

The universal side finishing closure plate is used to finish a pedestals raised terrace in places where insight into the internal terrace structure, e.g. external terrace or stairs, is undesirable. It allows the installation of properly prepared plates on the sides of the terrace and protects the final upper plates. With a universal side finishing closure plate, you can use 20-25 mm thick boards when connecting to the hooks or any thickness when connecting to glue. Increases the height of the bracket by 7 mm.



Aesthetic finish

The universal side finishing plate allows the aesthetic finish of both the sides and corners of the pedestals raised terrace while maintaining the 3 mm wide expansion gaps.



Easy installation

The universal side finishing closure plate gives the possibility of installing the vertical closure in two ways. For hooks (durable and durable solution) or with glue (without visible elements).

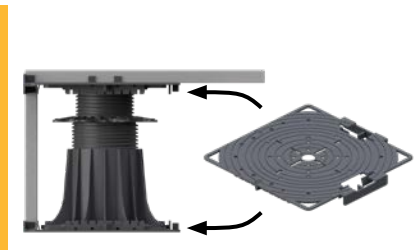

Well designed

The design of side finishing plate allows it to be used both on the top and under the pedestals. It is compatible with the Spiral, Standard and Max series.

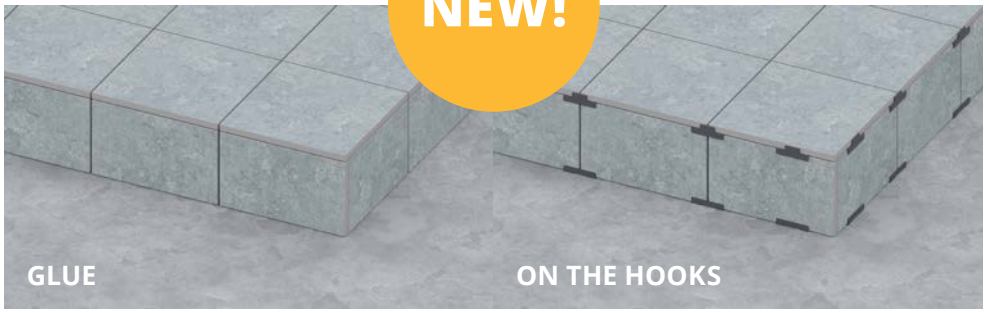

Side finishing closure plate



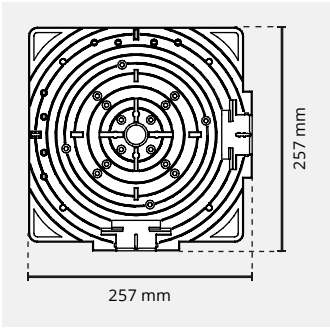

Name	Side finishing closure plate
Application	• terrace with tiles
Short name	DDP CP
Code	103741
Compatible series	• SPIRAL • STANDARD • MAX
Connection method	for glue or hooks
Height	3,5 mm
Material	plastic
Colour	black
Where to use	• raised outdoor pedestal flooring • terraces with stairs • terraces with a stairs
Included	• side finishing closure plate • clip • plug

Accessories for pedestals

Up to wall **clip**

Perimeter up to wall clip

The perimeter up to wall clip is placed on the head of the pedestals at vertical surfaces reaching over the height of the terrace, e.g. at the wall or high wall. It prevents plates from moving. Provides free water flow, preventing unwanted moisture.

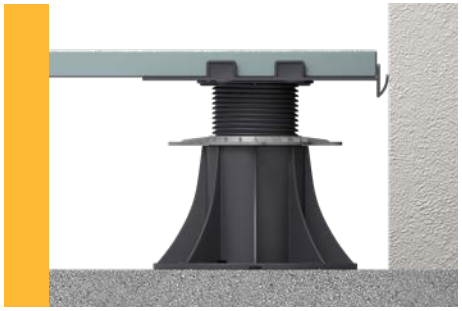

Tile joint

The use of an perimeter up to wall clip allows obtaining an even gap between the plates and the wall.



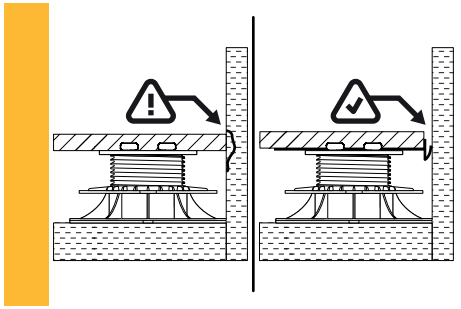

No moisture

The perimeter up to wall clip means that the water does not insist between terrace plates and the wall.



Tiles protection

It prevents the tiles from moving on the edge of the terrace by the wall.

Up to wall **clip**



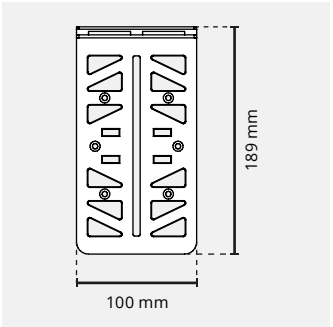

Name	Up to wall clip
Application	• terrace with tiles
Short name	DDPWAP
Code	104368
Compatible series	• SPIRAL • STANDARD • MAX
Connection method	tile gap spacers, the weight of the tiles
Height	2,5 mm
Material	plastic
Colour	black
Where to use	• terrace along the wall
Included	• up to wall clip

Accessories for pedestals

Drill driver **bit tool**

Drill driver bit tool

The pedestal turning tool is an element used to quickly change the height of the pedestals.

The accessory makes it easier to adjust the Standard and Max series pedestals.

Screwdriver is needed to use the pedestal turning tool.



Regulation speed

The pedestal turning tool accelerates the pedestal height regulation process, thus significantly shortening the time of the raised terrace.



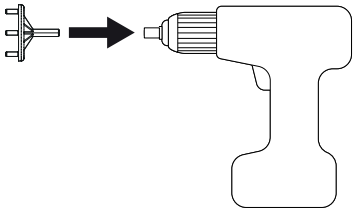

Easy installation

The pedestal turning tool for the screwdriver has a universal hexagonal tip compatible with each screwdriver.

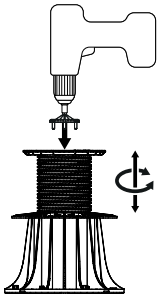

Easy to use

For quick pedestal height adjustment, insert bit into the pedestal head holes. Using the screwdriver by screwing or unscrewing, the height of the pedestal change it`s height.

Drill driver **bit tool**



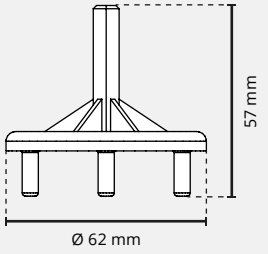

Name	Drill driver bit tool
Application	• terrace with tiles • terrace with decking
Short name	PPK
Code	107471
Compatible series	• STANDARD • MAX
Additional tools required	screwdriver
Material	PAFG
Colour	black
Where to use	• quick adjustment of the height of pedestals
Included	• drill driver bit tool

Accessories for pedestals

Rubber **shim SH**

Rubber shim SH

Rubber shim can be comprehensively used when making terrace with adjustable pedestals. Whenever it needs to tiles thickness adjust or make additional soundproof rubber shim are perfect solution. No more sand grain cracking under your tiles. Additional vibration absorption and noises mute

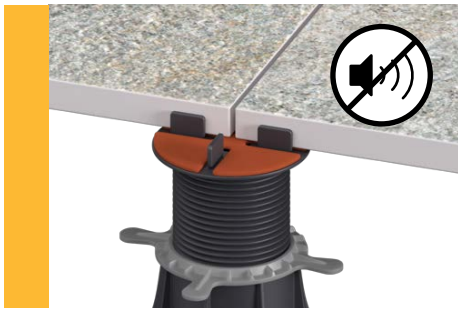

Soundproof

The main task of rubber shims is to soundproofing sounds that may appear between the pedestals and the terrace tiles.





Alligning tiles

Ruberh shims can be used to equalize the differences in the thickness of the tiles. Just put part of rubber shim under the tile with a lower height to get an equal surface of the terrace.



Easy installation

The size and shape of the SH rubber shims is adapted depending on the type of terrace stand or the pedestals series. Just put rubber shim on the pedestal head.

Rubber shim SH
(* variants for individual series)

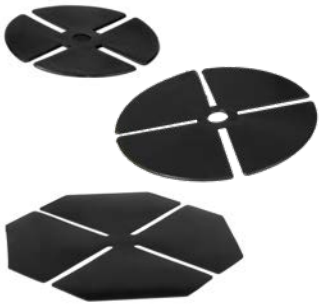

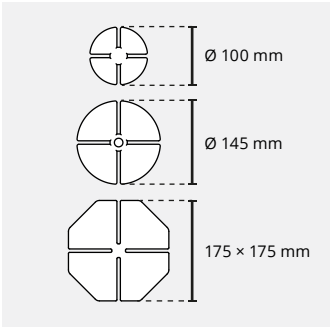

Name	Rubber shim SH
Application	• terrace with tiles
Size **Compatible series** • **Short name (code)**	**1.** Ø 100 mm (support pad 8 mm, STANDARD Series) • **SH100** (**10399**) **2.** Ø 145 mm (support pads 10 and 15 mm, SPIRAL Series, MAX Series) • **SH145** (**10314**) **3.** Ø 175 mm (support pad 16 mm) • **SH175** (**10318**)
Height	1,5 mm
Material	rubber
Colour	black
Where to use	• noise canelling the upper part of the pedestals • equalizing the differences in the thickness of the tiles.
Included	• SH rubber shim for the selected series

Accessories for pedestals

SBR rubber pad

SBR rubber granules pads

Rubber pads are used and placed under pedestals base. They are used for additional protection against damage to sensitive substrates such as waterproofing. An additional function of rubber pads is to mute the terrace between the pedestaks and the ground. All series of pedestals have the ability to use SBR rubber granules pads in the size adapted to them. Increases the height of the bracket by 3 or 8 mm depending on the variant.

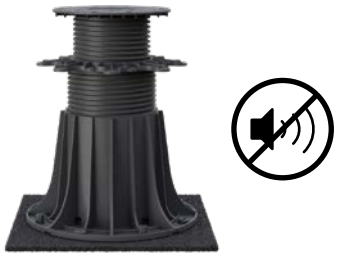

Noise cancelling

The rubber pad eliminates possible unwanted sounds that may arise between the bracket and the ground, e.g. due to sand grains.

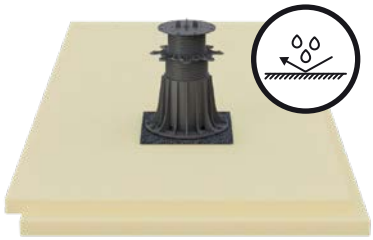

Sensitive substrates

It protects sensitive substrates (e.g. waterproofing) against damage.



Different sizes

The rubber pads are intended for all series of pedestals in various sizes dedicated to them.

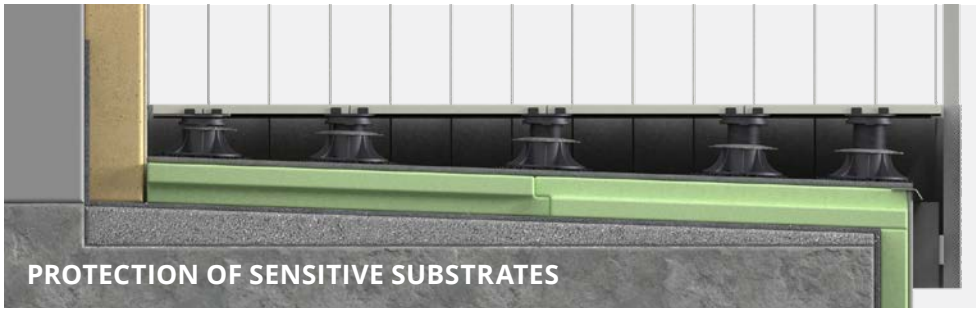

SBR rubber pad
(* variants of size and height)



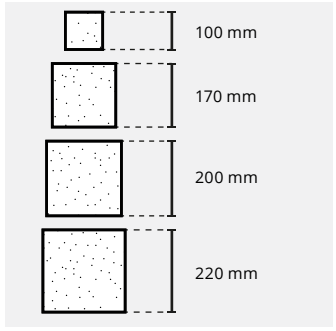

Name	SBR rubber pad
Application	• terrace with tiles • terrace with decking
Size **(Compatible series)** • **Height option - short name (code)**	**1.** 100 × 100 mm (support pad 2 mm) • 3 mm - **SBR 100/3** (**104161**) • 8 mm - **SBR 100/8** (**104162**) **2.** 170 × 170 mm (RAPTOR Series) • 3 mm - **SBR 170/3** (**107485**) **3.** 200 × 200 mm (support pads 8, 10, 15, 16 mm, SPIRAL Series, STANDARD Series) • 3 mm - **SBR 200/3** (**102557**) • 8 mm - **SBR 200/8** (**102559**) **4.** 220 × 220 mm (MAX Series) • 3 mm - **SBR 220/3** (**10414**)
Height	3 or 8 mm depending on the version
Material	SBR granules
Colour	black
Where to use	• noise cancelling • protection of sensitive substrates
Included	• rubber granules pad in the selected size and height

Accessories for pedestals

Self leveling head

Equally leveled terrace surface on a sloped area

The self -leveling head is used to make terrace terrace structures equally leveled on the area with a slope. It is possible to use it both for plates and for joists.
The self -leveling head is available in two versions - LE for the Standard and LE Max series for the Spiral and Max series. Self leveling head increase the height of the bracket by 16 mm (LE MAX 20 mm).

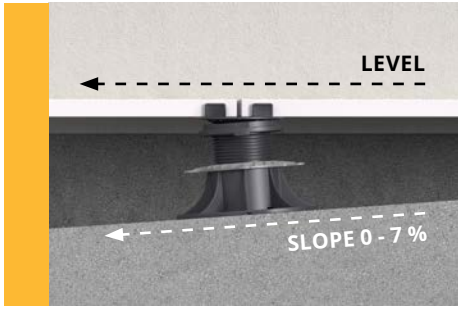

Basis layer with a slope

The self -leveling head allows to make an equally leveled terrace on the substrates with a slope of up to 7% (LE MAX 6%) slope.





Easy installation

The LE and LE Max self -leveling head is applied to the pedestal head. The hooks keep it firmly on the pedestal head.



Self -leveling

The use of the head causes self -leveling of the tiles under their own weight - no manual adjustment is required.

Self leveling head





Name	Self leveling head LE	Self leveling head LE MAX
Application	• terrace with tiles	• terrace with tiles
Short name	**LE**	**LE MAX**
Code	**10170**	**10680**
Compatible series	• STANDARD	• SPIRAL • MAX
Reduction of inclination	**0 - 7%**	**0 - 6%**
Height	16 mm	20 mm
Diameter	Ø 110 mm	Ø 157 mm
Connection method	hooks	hooks
Holes	• holes for gap spacers 3 and 5 mm	• in built gap spacers 3 mm • holes for gap spacers 5 mm
Material	plastic	plastic
Colour	black	black
Where to use	• terrace on the sloped area	• terrace on the sloped area
Included	• self leveling head LE	• self leveling head LE MAX

Accessories for pedestals

Key from the top

Pedestals height adjustment

The height regulation key from the top to adjust the small heights is used to change the height of the pedestal on the finished terrace. It helps reduce possible differences and cavities in the terrace surface after tiles installation. The height adjustment key from the top can be used for terraces placed on the max series with a self -leveling head only.



Ability to level surface after pavers have been installed

The height adjustment key to adjust the height is used to change the height of the pedestal by leveling surface after pavers have been installed.



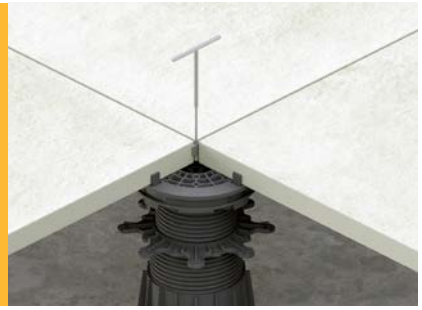

Simple regulation

The use of the height adjustment key from the top allows you to adjust the small height of the bracket without the need to disassemble the discs. The key is located in 1-2 mm gaps between the plates.

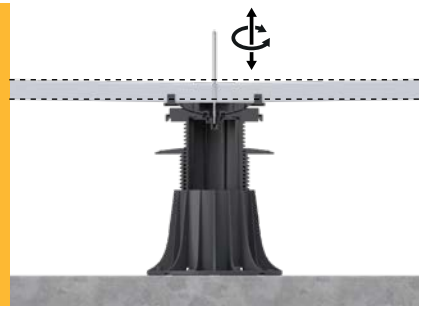

Height adjustment

The adjusment key allows you to make a small height adjustments.

Key from the top



Name	Key from the top
Application	• terrace with tiles
Short name	**MPK**
Code	**10744**
Compatible series	• MAX with a self leveling head
Material	metal
Colour	silver
Where to use	• small height adjustments of the pedestals after pavers have been installed
Included	• key from the top

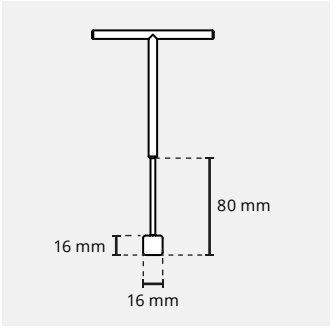

! TO USE A HEIGHT ADJUSTMENT KEY IT IS NECESSARY TO USE MAX SERIES WITH A SELF LEVELING HEAD.



enviro lift

RAPTOR

SERIES

Step height regulation from **15** to **245** mm

Application

Versatile and durable decking

Adjustable deck supports RAPTOR for decking terrace application. RAPTOR Series has a step regulation with each step abt. 1 mm. With it`s design they can be used for decking made of wood, composite with joists made of wood, WPC or aluminium. Wide pedestal base gives a solid support. There are additional accessories extending possibilities of application.

Faster deck installation

Easy to use design and joist adapter make installation much faster.

Durability

Pedestals resistant for high loadings

High precision of height adjustment

Step height adjustment 1 mm.

Universal application

For exterior decking and interior raised floors.

Low heights

Low height starts from 15 mm.

Slope corrector

Slope correction up to 7%

JOIST DECKING



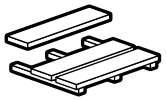

Joist decking

Adjustable deck supports RAPTOR for decking terrace application. In built joist adapter which helps for fast fixing joist to the pedestal.



RAPTOR series
Pedestal **design**

Pedestals construction

RAPTOR Series pedestals consists of two parts - top wedge and the base. Reaching heights more than 125 mm can be with adding height raiser on the base bottom.

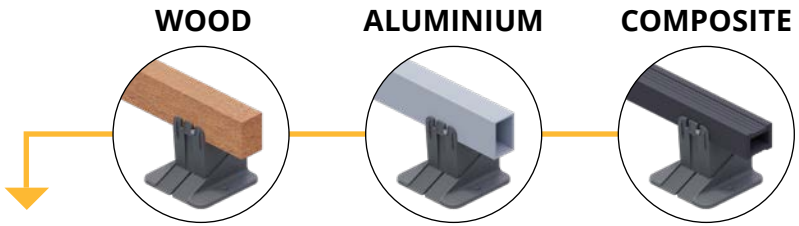



1. Wedge
Wedge helps to adjust jeight and provides support for decking.

2. Base
Pedestal base gives a stable support.

3. Height raiser
Height raiser add 30 mm height.

Heigh adjustment

Adjustable pedestas RAPTOR have a possibility to adjust height with a top wedge. Adjustment can be done by moving up and down top wedge. Each step is a 1 mm.

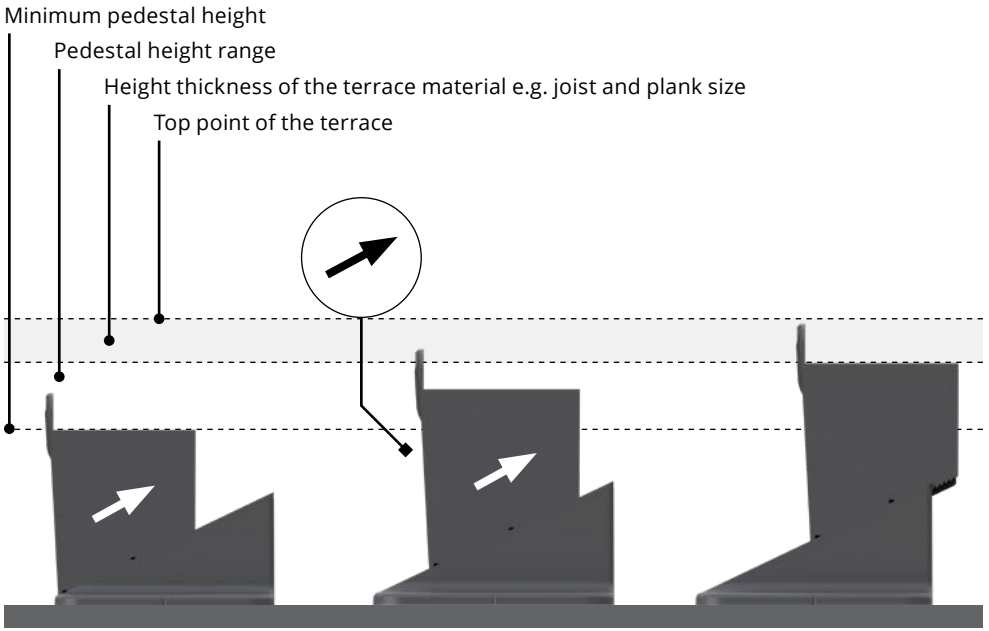



Advantages

1

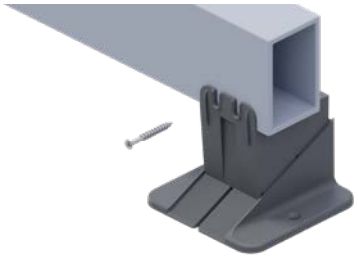

Easy installation

In built joist adapter which helps for fast fixing joist to the pedestal.

2



Stable pedestal base

Huge stability of the support due to proper size of the base.

3



For sloped areas

RAPTOR Series pedestals can be used on the surfaces with a large sloped area. Using a slope corrector allows to compensate slope up to 7%.

4



Fix it together

Easy to fix parts together with dedicated holes. The upper and lower part of the pedestals can be permanently connected by a screw.

5

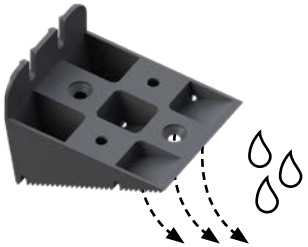

Water outflow

All system components have mounting holes and holes for water flowing thanks to which it is resistant to its operation.

6

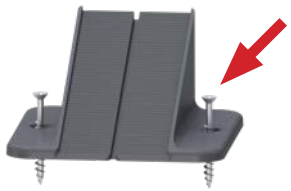

Fastening to the substrate

Mounting holes allowing optional attachment to the bottom surface. The pedestals can also be glued to a quick-drying mounting adhesive for sensitive surfaces such as water membrane.

RAPTOR series

RAPTOR pedestals





RAPTOR Series - height range from **15** to **245** mm

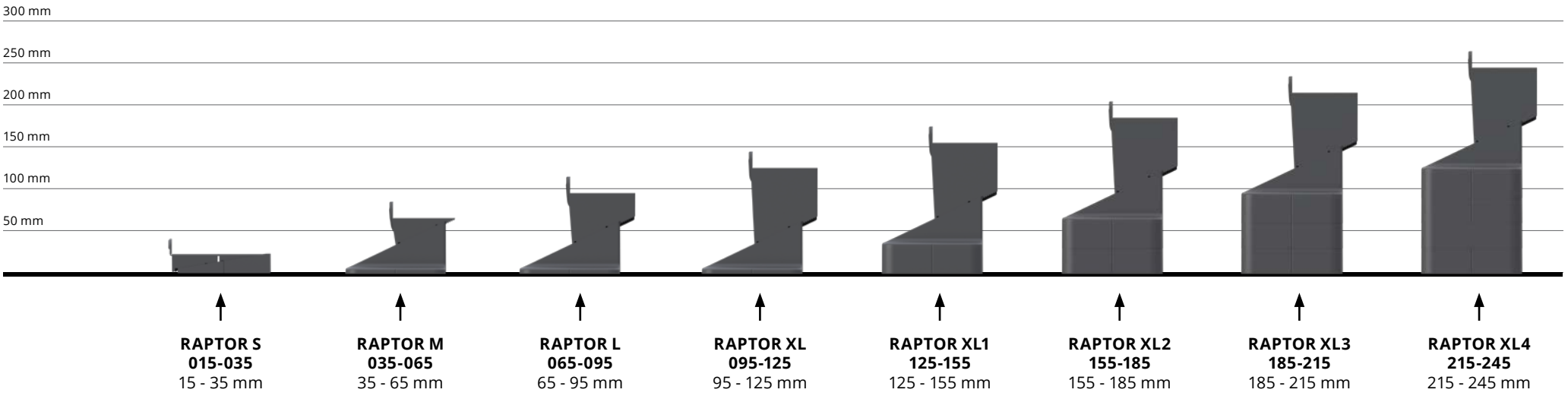

RAPTOR series

RAPTOR pedestals

RAPTOR pedestal **S**





Name	RAPTOR pedestal S
Application	• terrace with decking
Short name	**RAPTOR S**
Code	**10903**
Pedestal height range	**15 - 35** mm
Height adjustment	step height regulation (1 mm)
Pedestal dimensions	120 × 60 × (15 - 35) mm
Pedestal load capacity	1000 kg
Material	plastic
Colour	black
Where to use	• external decking • interior raised floors
Subsurface	• hard subsurface • sensitive subsurface • sloped surface
Included	• RAPTOR pedestal S

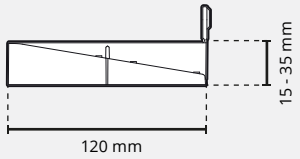

RAPTOR pedestal **M**





Name	RAPTOR pedestal M
Application	• terrace with decking
Short name	**RAPTOR M**
Code	**10904**
Pedestal height range	**35 - 65** mm
Height adjustment	step height regulation (1 mm)
Pedestal dimensions	120 × 120 × (35 - 65) mm
Pedestal load capacity	1000 kg
Material	plastic
Colour	black
Where to use	• external decking • interior raised floors
Subsurface	• hard subsurface • sensitive subsurface • sloped surface
Included	• RAPTOR pedestal M

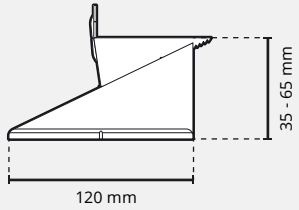

RAPTOR series

RAPTOR pedestals

RAPTOR pedestal **L**





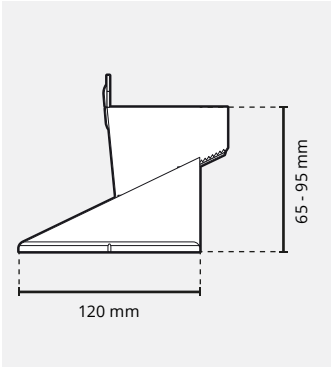

Name	RAPTOR pedestal L
Application	• terrace with decking
Short name	**RAPTOR L**
Code	**10905**
Pedestal height range	**65 - 95** mm
Height adjustment	step height regulation (1 mm)
Pedestal dimensions	120 × 120 × (65 - 95) mm
Pedestal load capacity	1000 kg
Material	plastic
Colour	black
Where to use	• external decking • interior raised floors
Subsurface	• hard subsurface • sensitive subsurface • sloped surface
Included	• RAPTOR pedestal L

RAPTOR pedestal **XL**





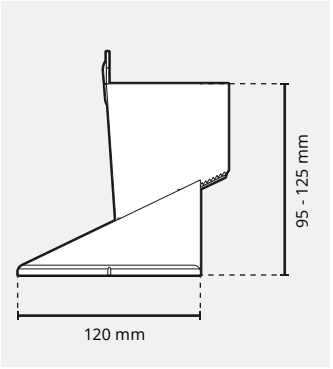

Name	RAPTOR pedestal XL
Application	• terrace with decking
Short name	**RAPTOR XL**
Code	**10906**
Pedestal height range	**95 - 125** mm
Height adjustment	step height regulation (1 mm)
Pedestal dimensions	120 × 120 × (95 - 125) mm
Pedestal load capacity	1000 kg
Material	plastic
Colour	black
Where to use	• external decking • interior raised floors
Subsurface	• hard subsurface • sensitive subsurface • sloped surface
Included	• RAPTOR pedestal XL

RAPTOR series

RAPTOR pedestals

RAPTOR pedestal **XL1**





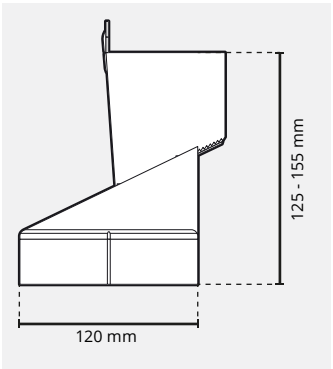

Name	RAPTOR pedestal XL1
Application	• terrace with decking
Short name	**RAPTOR XL1**
Code	**10906** + **10907**
Pedestal height range	**125 - 155** mm
Height adjustment	step height regulation (1 mm)
Pedestal dimensions	120 × 120 × (125 - 155) mm
Pedestal load capacity	1000 kg
Material	plastic
Colour	black
Where to use	• external decking • interior raised floors
Subsurface	• hard subsurface • sensitive subsurface • sloped surface
Included	• RAPTOR pedestal XL • height coupler P30

RAPTOR pedestal **XL2**





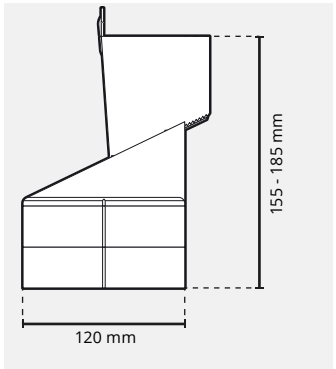

Name	RAPTOR pedestal XL2
Application	• terrace with decking
Short name	**RAPTOR XL2**
Code	**10906** + 2× **10907**
Pedestal height range	**155 - 185** mm
Height adjustment	step height regulation (1 mm)
Pedestal dimensions	120 × 120 × (155 - 185) mm
Pedestal load capacity	1000 kg
Material	plastic
Colour	black
Where to use	• external decking • interior raised floors
Subsurface	• hard subsurface • sensitive subsurface • sloped surface
Included	• RAPTOR pedestal XL • height coupler P30 (2 pcs.)

RAPTOR series

RAPTOR pedestals

RAPTOR pedestal **XL3**





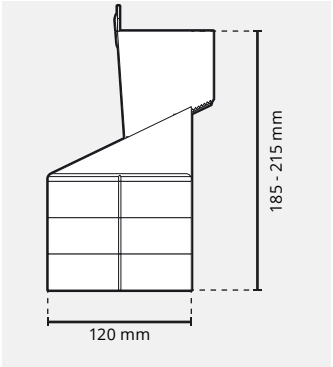

Name	RAPTOR pedestal XL3
Application	• terrace with decking
Short name	RAPTOR XL3
Code	**10906** + 3× **10907**
Pedestal height range	**185 - 215** mm
Height adjustment	step height regulation (1 mm)
Pedestal dimensions	120 × 120 × (185 - 215) mm
Pedestal load capacity	1000 kg
Material	plastic
Colour	black
Where to use	• external decking • interior raised floors
Subsurface	• hard subsurface • sensitive subsurface • sloped surface
Included	• RAPTOR pedestal XL • height coupler P30 (3 pcs.)

RAPTOR pedestal **XL4**





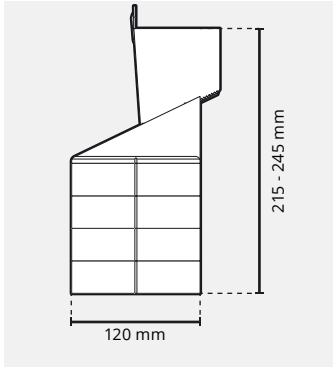

Name	RAPTOR pedestal XL4
Application	• terrace with decking
Short name	RAPTOR XL4
Code	**10906** + 4× **10907**
Pedestal height range	**215 - 245** mm
Height adjustment	step height regulation (1 mm)
Pedestal dimensions	120 × 120 × (215 - 245) mm
Pedestal load capacity	1000 kg
Material	plastic
Colour	black
Where to use	• external decking • interior raised floors
Subsurface	• hard subsurface • sensitive subsurface • sloped surface
Included	• RAPTOR pedestal XL • height coupler P30 (4 pcs.)

RAPTOR Series **accessories**

Image	Name	Where to use	Short name	Code	Dimensions a - length b - width h - height	Example of application
	**Height coupler 30 mm**	Height coupler allows to extend pedestal height with additional 30 mm.	P30	10907	a - 120 mm b - 120 mm h - 30 mm	
	**Base slope corrector 0-7%, 10 mm height**	Base slope corrector helps to compensate slope of the terrace and makes pedestal stay vertical even if stayingo on uneven sloped surface. Gives additional height of the pedestals 10 mm.	KN	10908	a - 203 mm b - 158 mm h - 10 mm	
	**Protection pad 2 mm**	It is placed under tiles corners. Gives additional protection for water membrane. Prevent tiles corner displacement. Gives addtitional height 2 mm.	PO	107483	a - 124 mm b - 124 mm h - 2 mm	
	**Acoustic pad 10 mm**	It is places under the pedestals and gives additional noise protection. Gives additional height 10 mm.	PA	107484	a - 124,2 mm b - 124,2 mm h - 10 mm	
	**SBR rubber pad SBR170, 3 mm**	Placed under the pedestal gives additional protection of the water membrane. Also gives additional noise cancellation. Gives additional height of 3 mm.	SBR 170/3	102557	a - 170 mm b - 170 mm h - 3 mm	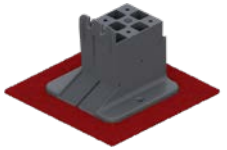



enviro lift

LAWN

EDGING

Nice looking finishin landscaping edges

Lawn edging

Where to use



Esthetic garden finishing

Lawn edging is to for finishing separate garden areas.

Lawn edges can be used with any height of pavers.

They are resistant to chemicals and UV rays.

Fits to every paver height.

1



Finishing

It is possible to finish the edges using metal strips (stainless steel and Corten).

2



Arches

It is possible to bend lawn edges. It is possible to adjust bending any arc, circles designs.

3



Connection

Easy to connect lawn edges together.

4



Side stabilization

Lawn edges are stabilised with its nails.

5



Design

Design of the lawn edges provides additional stabilisation. It is possible to lay electric wires and or water hose along.

6



Easy installation

Easy fixing to ground with nails.

Lawn edging

Lawn edging - black





Name	Lawn edging
Application	• Finishing the garden space • Separation of garden zones
Short name	OT
Code	104361
Length	1000 mm
Height	100 mm
Material	plastic
Colour	black
Included	• lawn edging - black

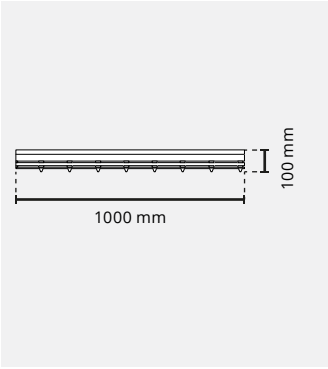

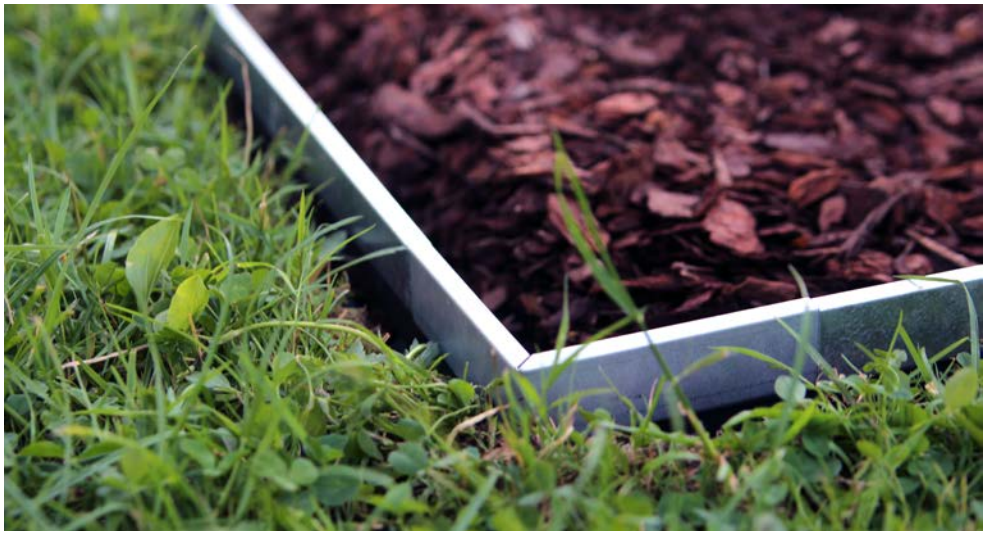



Lawn edges **accessories**

Image	Name	Where to use	Short name	Code	Dimensions a - length b - width h - height	Example of application
	**Metal strip for lawn edges - stainless steel**	Stainless steel strip for a nice looking finishing of the lawne edging.	NOT-I	104372	a - 1000 mm b - 30 mm h - 9 mm	
	**Metal strip for lawn edges - zinc**	Metal zinc strip for a nice looking finishing of the lawne edging.	NOT-Z	104371	a - 1000 mm b - 30 mm h - 9 mm	
	**Pin for fixing lawn edging**	Pin that helps fixing law edging.	NAIL	108889	Ø - 8 mm a - 275 mm	
	**Plastic pin for fixing lawn edging**	Plastic pin that helps fixing lawn edging.	NAIL-PP	109926	Ø - 8,5 mm a - 240 mm	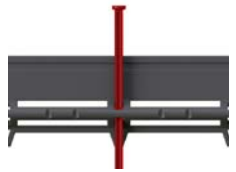



enviro lift

TERRACES

INSTALLATION

Practical tips for raised pedestals terraces installation.

Terraces **installation**

Practical **tips**

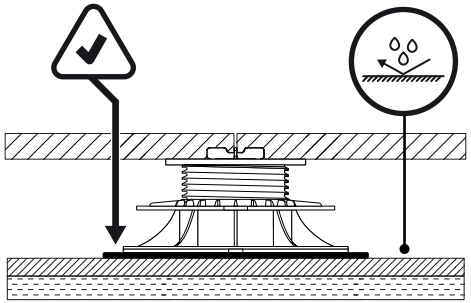

Type of the sub surface

When installing terrace with using adjustable pedestals, pay attention to the sub surface. Depen on type of the material surface underneath pedestals it can require additional accessories.

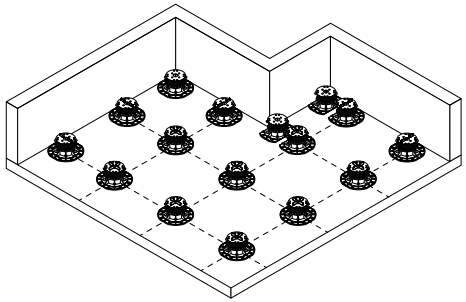

Works planning

When estimating quantity of the pedestals needed for a project remember about not typical geometry as e.g. edges along the wall, corners, arcs etc.

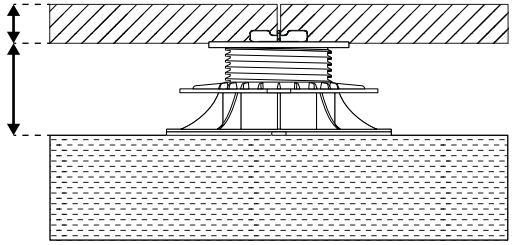

Terrace height

When estimating total height of the terrace height remember to take into account thickness of the material eg. total height of the tiles, planks, joists.

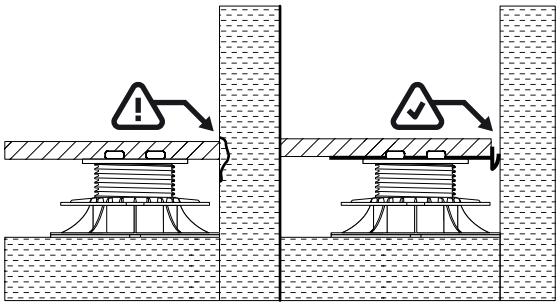

Joint gap

When making terrace with pedestals remember about joint gaps. It is important to make joint gaps wheter terrace is made of tiles of decking planks.

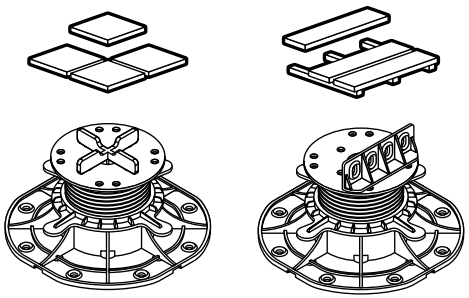

Suitable accessories

SPIRAL, STANDARD, MAX you can use for tiles and deckinge terraces. For using with tiles use gap spacers and for decking use joist adapter.

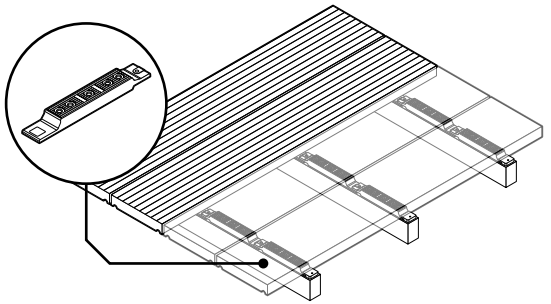

Additional accessories

Remember to use additional accessories as universal WPC clips or SBR rubber pad - it makes installation easier and raise overall comfort of terrace using.

Terraces **installation**

Practical **tips**

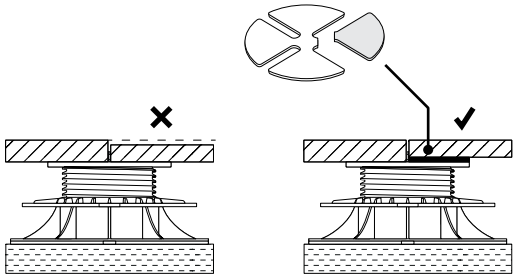

Unequal tile thickness

Not all tiles has the same thickness. To avoid visibile differencies on the deck surface use rubber shim SH that can easily be cut into pieces. Rubber shim can easily align tiles thickness.

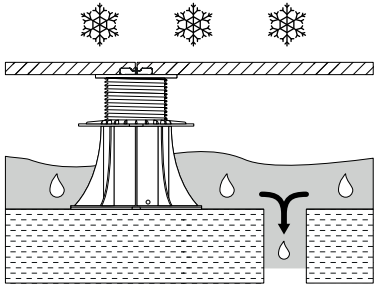

Pedestals in the water

Raised floor terraces with pedestals can be used with water facilities as fountain, pool etc. However it is important to remember to release the water for a winter period to avoid water freezing inside the pedestals that can lead to it`s damage.

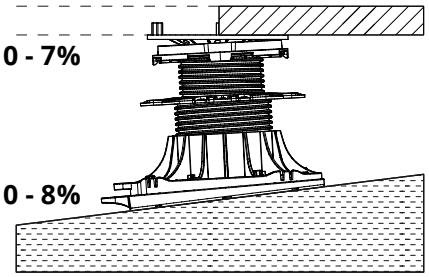

Subsurface with a slope

Raised terraces with pedetsals allows to create a flat surface on the top of the terrace even if surface underneath has a slope for water drainage. Self leveling head and slope corrector can help with leveling the surface.

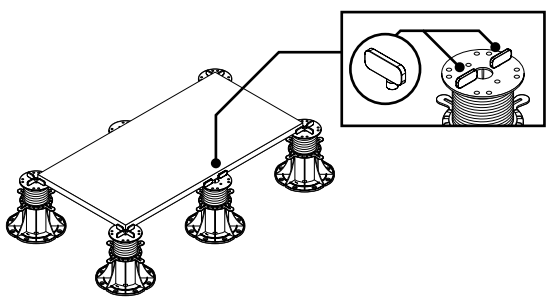

Large tile formats

Tiles with a large format may needs additional pedestals support along the edges.

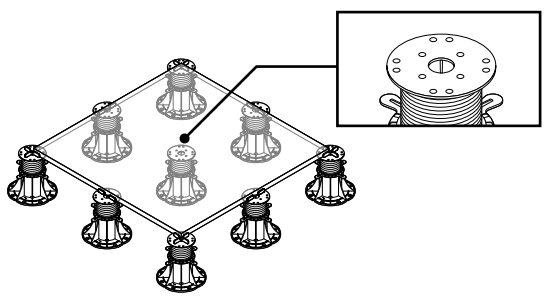

Large tile formats

Tile with a large format may require additional support in the center. Place pedestal with a plain head under the tile. Ask your tile supplier about recommended support between pedestals.

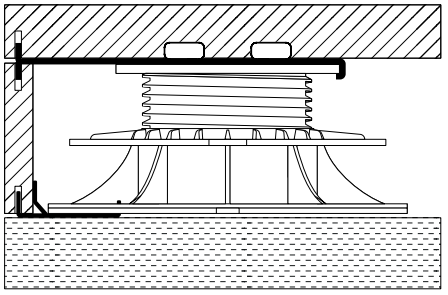

Covering the edges

To cover the edges it needs using a vertical edge clip. Vertical edge clip allows for installation tiles that covers the gap between tiles and the terrace bottom surface.

Terraces **installation**

Practical **tips**

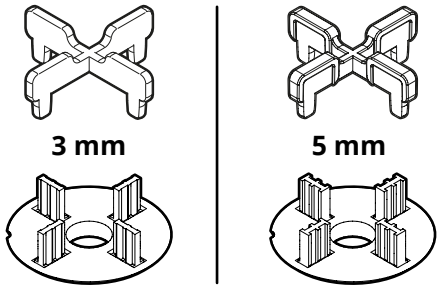

Joint spacers

Pedestals has spacer lugs gaskets that makes gap between tiles. There are available sizes 3 and 5 mm.

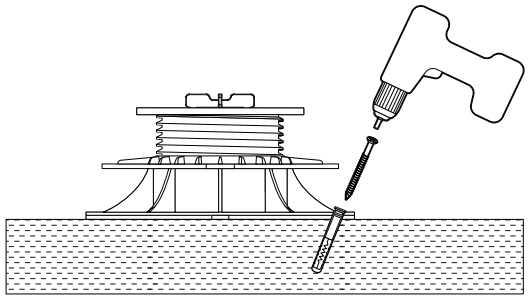

Fixing pedetals I

If there is no water membrane on the terrace surface pedestals can be fixed to the bottom surface with rawplugs or screws.

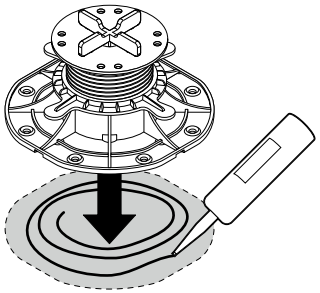

Fixing pedetals II

Fixing pedestals to the bottom surface is not possible if there is water membrane on the roof. In this case we recommend to fix pedestals with glue if needed.

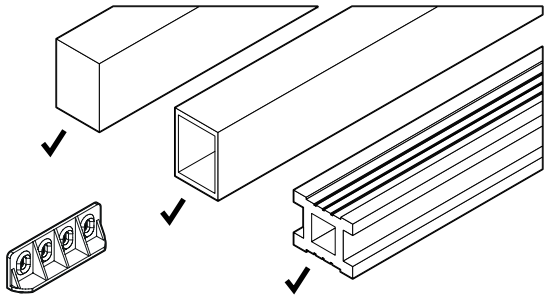

Decking terraces

For installation decking with joists use pedestals with joist L adapter. It is possible to use all types of joists as wood, WPC, aluminium.

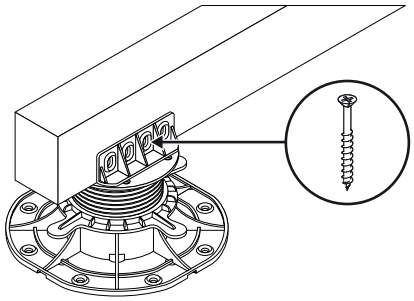

Fixing joists

To fix joists with pedestals use screws. It is recommended to fix joists to avoid displacement.

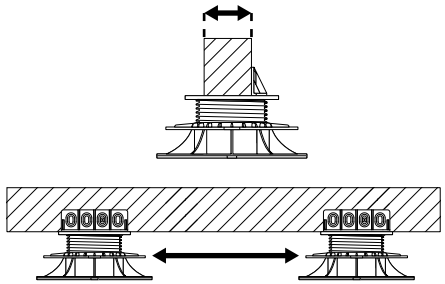

Pedestals spread distance

The distance between each pedestal depend on the type of the joist. Ask your joist supplier for recommended distance between pedestals.

Terraces **installation**

Pedestals **usage**

Tiles support

When calculating pedestals quantity always consider support distance, tiles thickness and hardness.

Pedestals can be used with all types of terrace tiles.

ASK YOUR TERRACE TILES SUPPLIER FOR RECOMMENDED DISTANCE BETWEEN PEDESTALS.

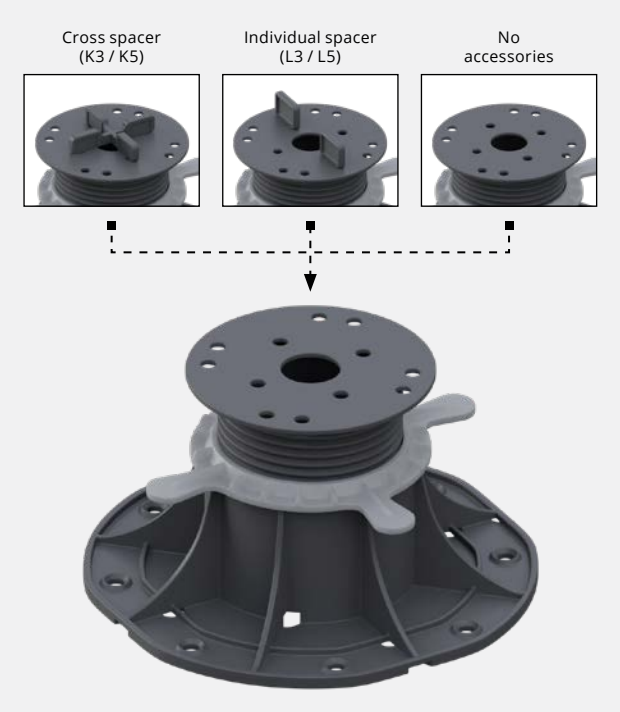



Standard tiles

- standard support in each corner.



Support for large formats

- in each corner with additional center support.



Long tiles

- in each corner with additional pedestals in the longe edges.



Support for large and long tiles

- in each corners and additional support long edges and center support.

Terraces **installation**

Pedestals **usage**

PROVIDED GENERAL INFORMATION. EACH PROJECT NEEDS INDIVIDUAL QUANTITIES CALCULATION.

	SQUARE SHAPED PAVER WITH SUPPORT PLACED ON THE CORNERS			SQUARE SHAPED PAVER WITH SUPPORT PLACED CENTRAL AND ON THE CORNERS		
Tiles dimension	Terrace without perimeter wall	Terrace along the wall	Terrace in the corner	Terrace without perimeter wall	Terrace along the wall	Terrace in the corner
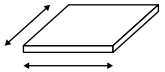	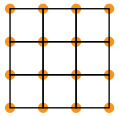	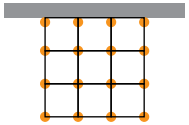	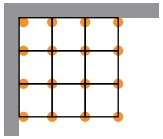	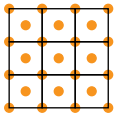	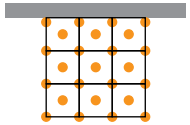	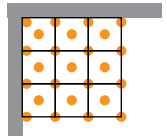
30 × 30 cm	**11,11** pcs. / m²	**12,5** pcs. / m²	**14,6** pcs. / m²	**22,22** pcs. / m²	**23,61** pcs. / m²	**25,17** pcs. / m²
40 × 40 cm	**6,25** pcs. / m²	**7,29** pcs. / m²	**8,51** pcs. / m²	**12,5** pcs. / m²	**13,54** pcs. / m²	**14,76** pcs. / m²
45 × 45 cm	**4,94** pcs. / m²	**5,76** pcs. / m²	**6,72** pcs. / m²	**9,88** pcs. / m²	**10,7** pcs. / m²	**11,66** pcs. / m²
50 × 50 cm	**4** pcs. / m²	**5** pcs. / m²	**6,25** pcs. / m²	**8** pcs. / m²	**9** pcs. / m²	**10,25** pcs. / m²
60 × 60 cm	**2,78** pcs. / m²	**3,47** pcs. / m²	**4,34** pcs. / m²	**5,55** pcs. / m²	**6,25** pcs. / m²	**7,12** pcs. / m²
75 × 75 cm	**1,78** pcs. / m²	**2,22** pcs. / m²	**2,78** pcs. / m²	**3,56** pcs. / m²	**4** pcs. / m²	**4,56** pcs. / m²
80 × 80 cm	**1,56** pcs. / m²	**1,95** pcs. / m²	**2,44** pcs. / m²	**3,13** pcs. / m²	**3,52** pcs. / m²	**4** pcs. / m²
90 × 90 cm	**1,24** pcs. / m²	**1,54** pcs. / m²	**1,93** pcs. / m²	**2,47** pcs. / m²	**2,78** pcs. / m²	**3,16** pcs. / m²

Terraces **installation**

Pedestals **usage**

PROVIDED GENERAL INFORMATION. EACH PROJECT NEEDS INDIVIDUAL QUANTITIES CALCULATION.

	RECTANGULAR SHAPED PAVER - PAIRED LAYING - WITH SUPPORT PLACED ON THE CORNERS			RECTANGULAR SHAPED PAVER - NOT ALIGNED LAYING - WITH SUPPORT PLACED ON THE CORNERS		
Tiles dimension	Terrace without perimeter wall	Terrace along the wall	Terrace in the corner	Terrace without perimeter wall	Terrace along the wall	Terrace in the corner
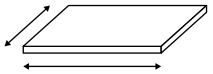	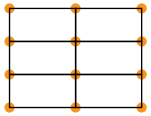	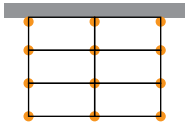	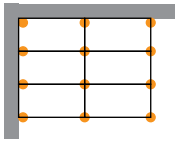	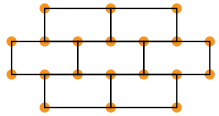	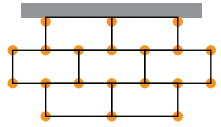	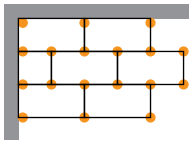
30 × 35 cm	**9,52** pcs. / m²	**10,71** pcs. / m²	**12,5** pcs. / m²	**16,85** pcs. / m²	**17,95** pcs. / m²	**19,6** pcs. / m²
30 × 60 cm	**5,56** pcs. / m²	**6,25** pcs. / m²	**7,81** pcs. / m²	**10,3** pcs. / m²	**10,49** pcs. / m²	**11,88** pcs. / m²
35 × 40 cm	**7,14** pcs. / m²	**8,33** pcs. / m²	**9,72** pcs. / m²	**11,77** pcs. / m²	**13,03** pcs. / m²	**14,5** pcs. / m²
30 × 90 cm	**3,7** pcs. / m²	**4,17** pcs. / m²	**5,21** pcs. / m²	**6,61** pcs. / m²	**7,14** pcs. / m²	**8,33** pcs. / m²
30 × 120 cm	**5,56** pcs. / m²	**6,25** pcs. / m²	**7,81** pcs. / m²	**5,56** pcs. / m²	**6,11** pcs. / m²	**7,36** pcs. / m²
40 × 60 cm	**4,17** pcs. / m²	**4,86** pcs. / m²	**6,08** pcs. / m²	**7,05** pcs. / m²	**7,69** pcs. / m²	**8,81** pcs. / m²
40 × 80 cm	**3,13** pcs. / m²	**3,65** pcs. / m²	**4,56** pcs. / m²	**5,11** pcs. / m²	**5,68** pcs. / m²	**6,68** pcs. / m²
40 × 120 cm	**4,17** pcs. / m²	**4,86** pcs. / m²	**6,08** pcs. / m²	**4,17** pcs. / m²	**4,76** pcs. / m²	**5,8** pcs. / m²
45 × 90 cm	**2,47** pcs. / m²	**2,88** pcs. / m²	**3,6** pcs. / m²	**4,04** pcs. / m²	**4,49** pcs. / m²	**5,28** pcs. / m²
60 × 120 cm	**1,39** pcs. / m²	**1,74** pcs. / m²	**2,6** pcs. / m²	**2,78** pcs. / m²	**3,33** pcs. / m²	**4,03** pcs. / m²

Terraces **installation**

Pedestals **usage**

PROVIDED GENERAL INFORMATION. EACH PROJECT NEEDS INDIVIDUAL QUANTITIES CALCULATION.

	RECTANGULAR SHAPED PAVER - PAIRED LAYING - WITH SUPPORT PLACED CENTRAL AND ON THE CORNERS			RECTANGULAR SHAPED PAVER - NOT ALIGNED LAYING - WITH SUPPORT PLACED CENTRAL AND ON THE CORNERS		
Tiles dimension	Terrace without perimeter wall	Terrace along the wall	Terrace in the corner	Terrace without perimeter wall	Terrace along the wall	Terrace in the corner
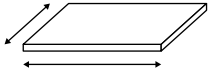	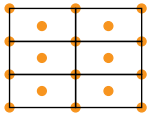	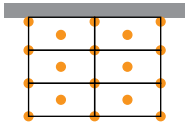	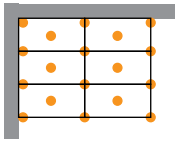	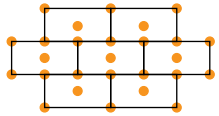	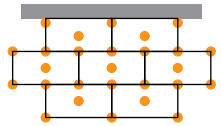	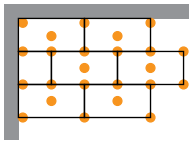
30 × 35 cm	**19,35** pcs. / m²	**20,04** pcs. / m²	**22,02** pcs. / m²	**25,64** pcs. / m²	**26,74** pcs. / m²	**28,39** pcs. / m²
30 × 60 cm	**11,11** pcs. / m²	**11,81** pcs. / m²	**13,37** pcs. / m²	**14,82** pcs. / m²	**15,43** pcs. / m²	**16,82** pcs. / m²
35 × 40 cm	**14,29** pcs. / m²	**15,48** pcs. / m²	**16,87** pcs. / m²	**18,49** pcs. / m²	**19,75** pcs. / m²	**21,22** pcs. / m²
30 × 90 cm	**7,41** pcs. / m²	**7,87** pcs. / m²	**8,91** pcs. / m²	**11,42** pcs. / m²	**12,04** pcs. / m²	**13,43** pcs. / m²
30 × 120 cm	**11,11** pcs. / m²	**11,81** pcs. / m²	**13,37** pcs. / m²	**11,11** pcs. / m²	**11,67** pcs. / m²	**12,92** pcs. / m²
40 × 60 cm	**8,33** pcs. / m²	**9,03** pcs. / m²	**10,24** pcs. / m²	**10,09** pcs. / m²	**11,54** pcs. / m²	**12,66** pcs. / m²
40 × 80 cm	**6,25** pcs. / m²	**6,77** pcs. / m²	**7,68** pcs. / m²	**7,96** pcs. / m²	**8,52** pcs. / m²	**9,52** pcs. / m²
40 × 120 cm	**8,33** pcs. / m²	**9,03** pcs. / m²	**10,24** pcs. / m²	**8,33** pcs. / m²	**8,93** pcs. / m²	**9,97** pcs. / m²
45 × 90 cm	**4,94** pcs. / m²	**5,35** pcs. / m²	**6,07** pcs. / m²	**6,29** pcs. / m²	**6,73** pcs. / m²	**7,52** pcs. / m²
60 × 120 cm	**4,17** pcs. / m²	**4,51** pcs. / m²	**5,38** pcs. / m²	**5,56** pcs. / m²	**6,11** pcs. / m²	**6,81** pcs. / m²

What else we can do **for you?**



TEST REPORTS AND SPECIFICATION

Our products has all test reports and specification done by independent laboratory.



FAST TRANSPORT

We have experience with deliveries in any place in the world.



IN HOUSE LABORATORY

In our laboratory we always work to ensure that products for you will be the best quality.



STAND OUT FROM THE COMPETITION

Be unique develop your sales with a product that does not have your competition.

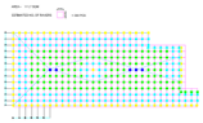

PEDESTALS TAKE OFF

We will help you to calculate how many and which height of the pedestals you will need to use on your projects.



TRUSTOWRTHY AND CONCENTRATED ON THE CLIENTS COMFORT

All after all we are a trustworthy people and always try to help.

enviro lift

We beleive that there are simple solutions for a difficult poblems.

We have a long time experience with exterior terraces and decking. We see much more details in it. For us and for most of people this is the favorite „room" in home if only weather is good to go outside.

We take a full responsibility for our products.

CERTIFIED PRODUCTS

PRODUCTION



TRANSPORT DELIVERY



RESEARCH AND DEVELOPMENT DIVISION.

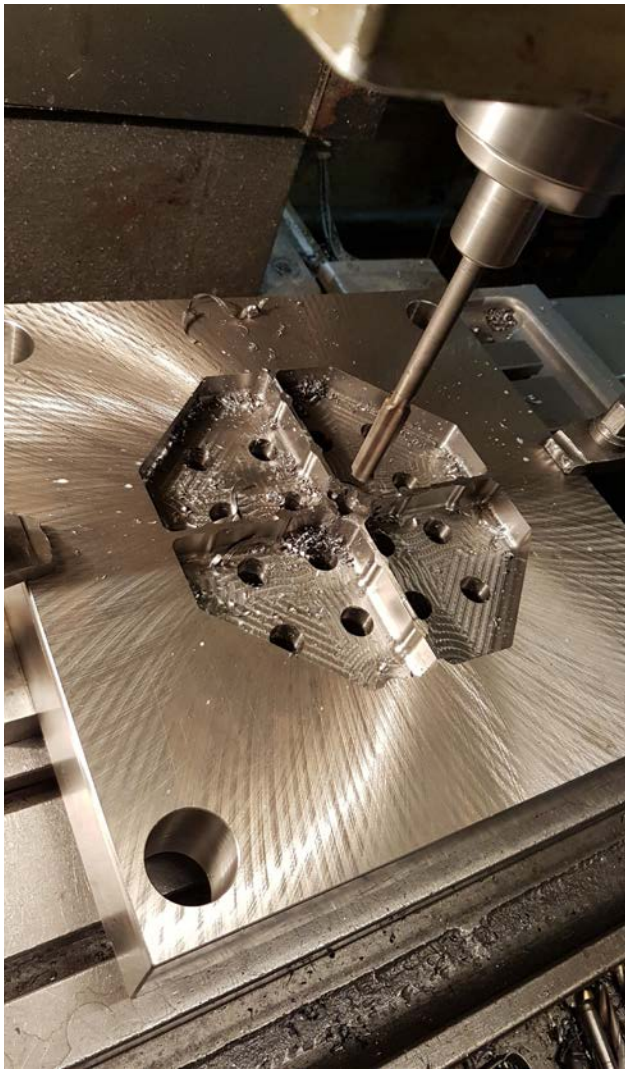

projects



Przystań Letnica

Gdansk, Poland / 2’500 m²



Browar Port Gdynia

Gdynia, Poland / 1’000 m²



Osiedle Garnizon

Gdansk, Poland / 10’000 m²



Platinium Aparthotel

Rewal, Poland / 2’250 m²

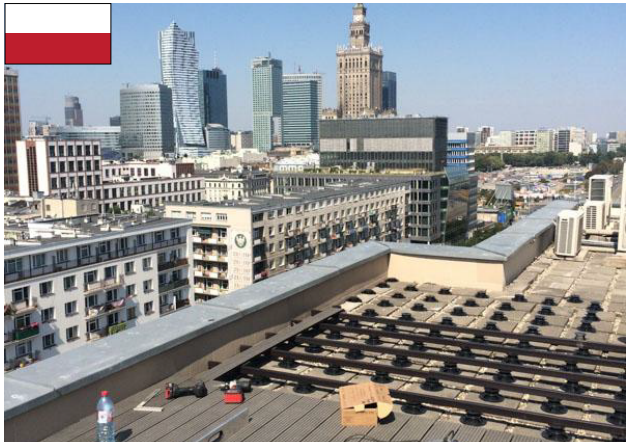

Dzień Dobry TVN Studio

Warszawa, Poland / 120 m²



Baltica Towers

Gdansk, Poland / 4’000 m²

projects



Hotel Punta

Croatia / 4’500 m²



IKEA Stores and four Ikano Centres

Malaysia / 25’000 m²



Empire Stores Dumbo Brooklyn

USA / 5’000 m²



C38- C38 District & Parks, Dubai Expo

United Arab Emirates / 120 m²



Mango House Project

Seychelles / 4’000 m²



Haus Merkur

Germany / 3’400 m²

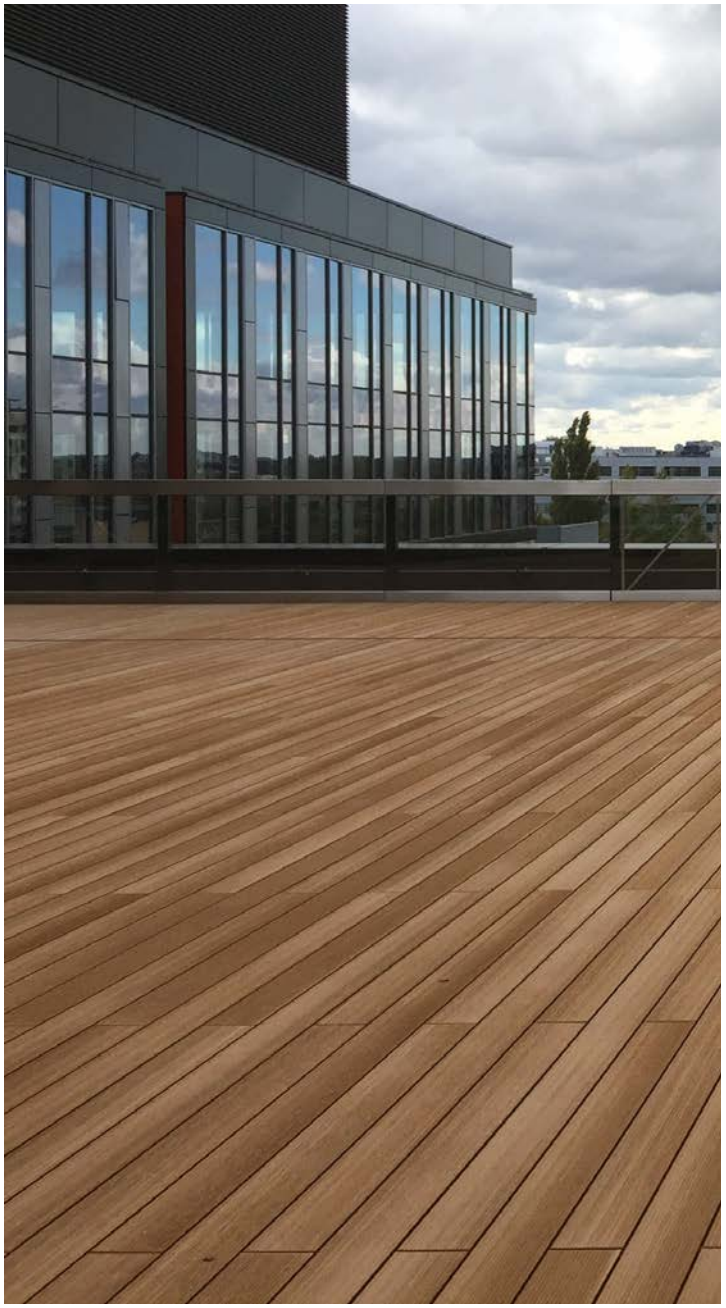

enviro lift

RAISED OUTDOOR PEDESTAL FLOORING

