FIRE CLASSIFICATION ACCORDING TO PN-EN 13501-1+A1:2010

Agreement number: 02466/17/Z00NZP

Ordered by:	Croswood Sp. z o.o. Sp. k. Lipnowska 21-23 87-100 Toruń
Developed by:	Fire Research Department, Building Research Institute at Filtrowa 1 00-611 Warszawa
Product name:	CP façade profiles with finishing components
Classification report No.:	02466.1/17/Z00NZP
Edition number: 1	Copy No.: 1
Issued on:	2019.02.20

This classification report consists of four pages, and can be used or reproduced only as a whole.

1. Introduction

This classification report specifies classification of CP façade profiles with finishing components, assigned in accordance with procedures specified in PN-EN 13501-1+A1:2010.

2. Specific information about classified product

2.1 General

CP façade profiles with finishing components.

Product description

The product is described below.

CP façade profiles with finishing components.
CP profiles are made of rice husk (silica) composite, and coated with FVG-type dye and RFS-type varnish.
The profiles are fixed with 3.5 x 30 mm stainless steel screws to a substructure constructed of CP installation joists.
CP 95S profile weight 1.1 kg/rm.
CP 140S profile weight 1.45 kg/rm.
CP 280S profile weight 2.68 kg/rm.

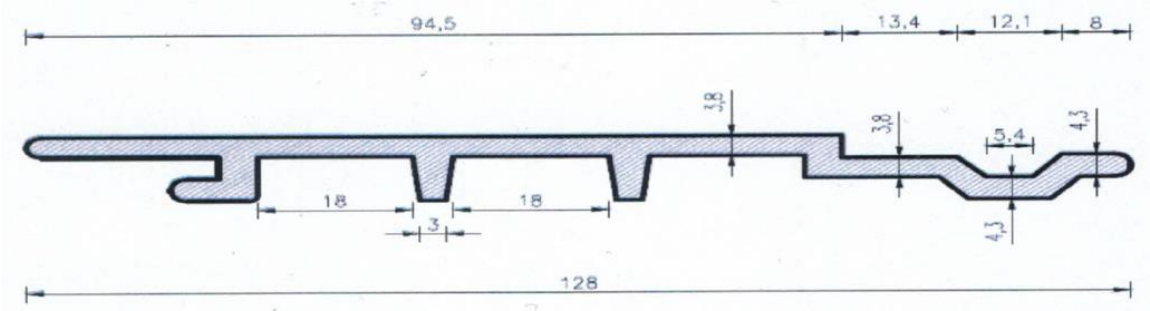

Fig. 1 CP 95S façade profile.

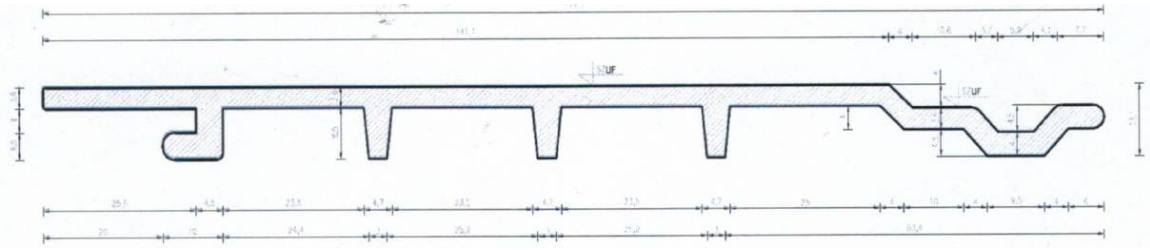

Fig. 2 CP 140S façade profile.

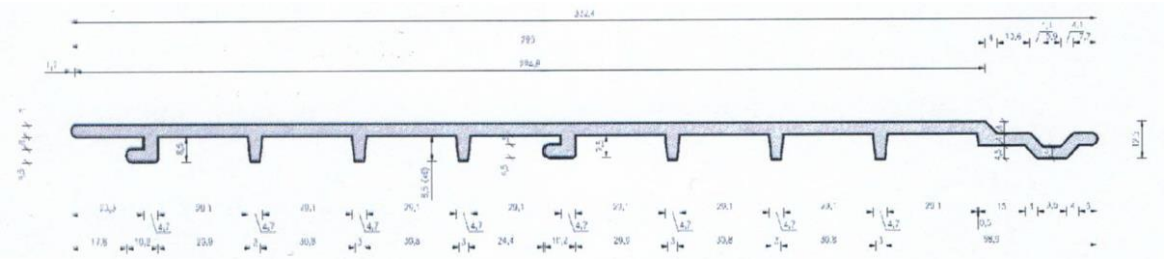

Fig. 3 CP 280S façade profile.

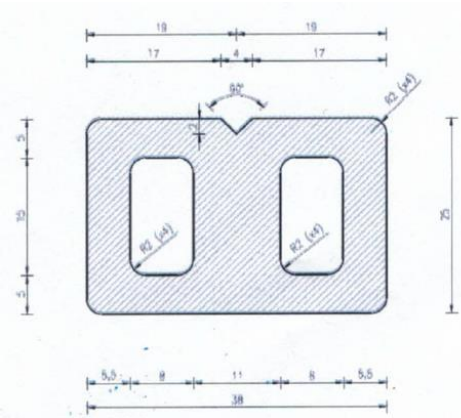

Fig. 4 Installation joist.

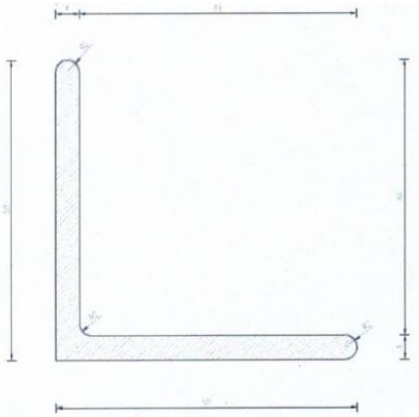

Fig. 5 Angle profile KAT50.50

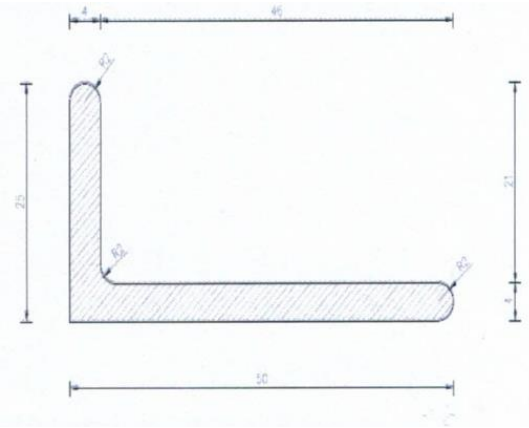

Fig. 6 Angle profile KAT50.25

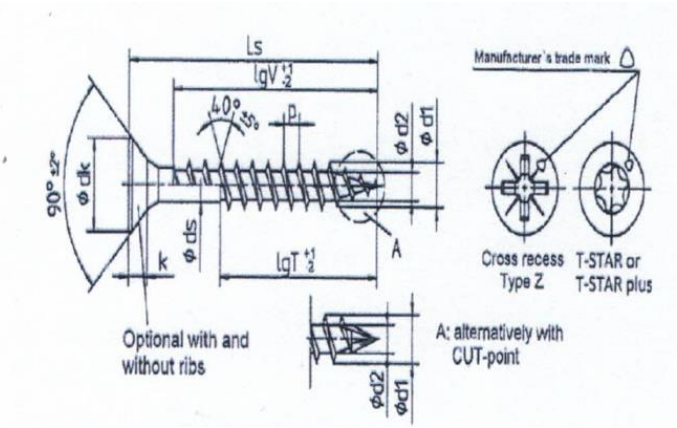

Fig. 7 Installation screw

CP façade profiles with finishing components are manufactured by Croswood Sp. z o.o. Sp. k.

3. Test reports and tests results forming a basis for classification

3.1 Test reports

Laboratory name	Customer name	Test report No.	Test method
Fire Testing Laboratory ITB	Croswood Sp. z o.o. Sp. k.	LZP01 -02466/17/Z00NZP	PN-EN ISO 11925-2:2010
		LZP02-02466/17/Z00NZP	PN-EN 13823+A1:2014

3.2 Test results

Test method	Parameter	Number of tests	Results	
			Continuous parameter - mean value (m)	Conforming parameter
PN-EN ISO 11925-2:2010 Surface and edge exposure Exposure of 30 s	Spread of flame $F_S \leq 150$ mm	6	(-)	Y
	Flaming droplets/particles		(-)	N
PN-EN 13823+A1:2014	FIGRA $_{0.2MJ}$	3	120.3	(-)
	FIGRA $_{0.4MJ}$		120.3	(-)
	LFS < edge		(-)	Y
	THR_{600s}[MJ]		12.3	(-)
	SMOGRA [m^2/s^2]		167.0	(-)
	TSP_{600s} [m^2]		1609.2	(-)
	Flaming droplets/particles		(-)	N

(-): not applicable
Y: YES
N: NO

4. Classification and its scope of application

4.1 Normative references

Classification was determined in accordance with PN-EN 13501-1+A1:2010.

4.2 Classification

In terms of their reaction to fire, CP façade profiles with finishing components were classified as:

C

Considering generation of smoke, the product was additionally classified as:

s3

Considering presence of flaming droplets/particles, the product was additionally classified as:

d0

The classification format in terms of reaction to fire for construction materials, excluding floorings and linear products for thermal insulation of ducts, is as follows:

Fire properties		Smoke generation			Flaming droplets	
C	**-**	**s**	**3**	**under**	**d**	**0**

i.e.: C-s3,d0

Classification concerning reaction to fire: C-s3,d0

This classification report applies to final uses conforming to technical conditions that should be met by buildings and their location, and for a “fire retardant material with no flaming drops with integrity of the structure maintained during fire test” in accordance with the Regulation of Minister of Infrastructure of 12 April 2002 (Journal of Laws No. 75 of 15 June 2002, item 690, as amended).

4.3 - Applicability

This classification applies to the following parameters defining the product:

- CP façade profiles with finishing components described in section 2 of this classification report.
- CP façade profiles with finishing components fixed directly to or at any distance from bases of the fire class of at least A2-s3,d0 according to PN-EN 13501-1, or gypsum board.
- CP façade profiles with finishing components fixed mechanically in any layout to substructure of installation joists.

5 Limitations

The assigned classification will remain valid until:

- the test method is changed;
- the product standard or the product technical approval is changed;
- any construction and/or material changes are made exceeding the application scope
- specified in 4.3.

This classification report has been issued in 3 counterparts (2 for the Customer, 1 for the Fire Research Department, ITB). The certified copies can be issued by the Fire Research Department, ITB, only on request of the report Owner.

This classification document is not a product approval or certificate.

Signed by	Approved by
Łukasz Jarochowicz	acting Head of the Fire Research Department Bartłomiej K. Papis, PhD Eng.