Building Research Institute

Scientific research | Development works | Accredited Complex of Laboratories |
Notified Body No. 14881 | EOTA Member | Management systems certified to ISO 9001 and ISO 27001

FIRE CLASSIFICATION ACCORDING TO PN-EN 13501-1+A1:2010

Agreement number: 02466/17/Z00NZP

Ordered by:	Croswood Sp. z o.o. Sp. k. at Lipnowska 21-23 87-100 Toruń
Developed by:	Fire Research Department, Building Research Institute at Filtrowa 1 00-611 Warszawa
Product name:	Rice husk (silica) composite for façade profiles
Classification report No.:	02466.4/17/Z00NZP
Edition number: 1	Copy No.: 2
Issued on:	2019.02.20

This classification report consists of four pages, and can be used or reproduced only as a whole.

1. Introduction

This classification report specifies classification of rice husk (silica) composite for façade profiles, assigned in accordance with procedures specified in PN-EN 13501-1+A1:2010.

2. Specific information about classified product

2.1 General

Material for façade profiles.

Product description
The product is described below.

A full/solid profile made of rice husk (silica) composite. The profiles are fixed with 3.5 x 30 mm stainless steel screws to a substructure constructed of installation joists.
Profile weight up to 3.85 kg/rm.
Thickness 18.5 mm.



Fig. 1 Full profile PP130.20S.

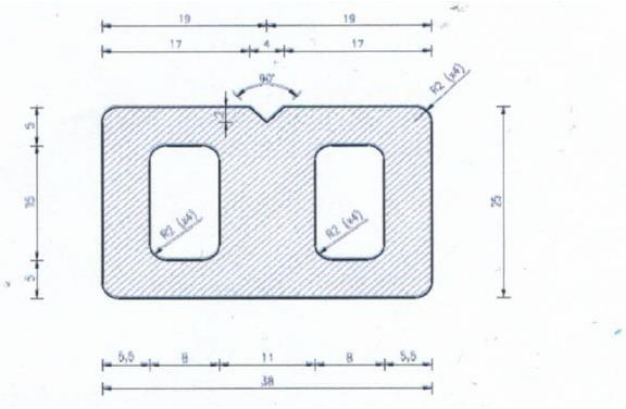

Fig. 2 Installation joist.

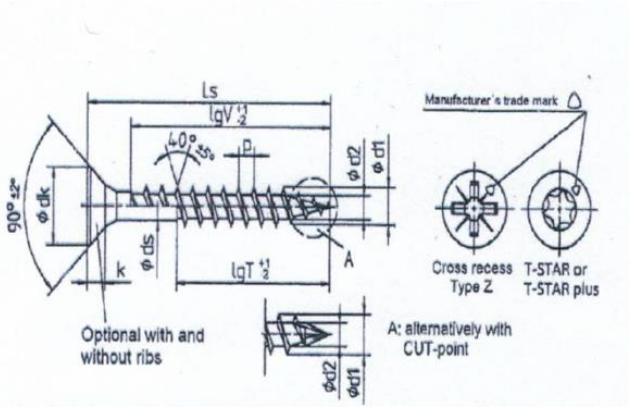

Fig. 3 Installation screw

Full/solid profiles are manufactured by the company CROSWOOD Sp. z o.o. Sp. k.

3. Test reports and tests results forming a basis for classification

3.1 Test reports

Laboratory name	Customer name	Test report No.	Test method
Fire Testing Laboratory ITB	Croswood Sp. z o.o. (Limited Liability Company) Sp. k.	LZP07-02466/17/Z00NZP	PN-EN ISO 11925-2:2010
		LZP06-02466/17/Z00NZP	PN-EN 13823+A1:2014

3.2 Test results

Test method	Property	Number of tests	Performance	
			Continuous parameter - mean value (m)	Conforming parameter
PN-EN ISO 11925-2:2010 Surface and edge exposure Exposure of 30 s	Spread of flame $F_S \leq 150$ mm	6	(-)	T
	Flaming droplets/particles		(-)	N
PN-EN 13823+A1:2014	FIGRA $_{0.2MJ}$	3	39.4	(-)
	FIGRA $_{0.4MJ}$		37.0	(-)
	LFS < edge		(-)	T
	THR_{600s}[MJ]		4.3	(-)
	SMOGRA [m^2/s^2]		51.7	(-)
	TSP_{600s} [m^2]		570.4	(-)
	Flaming droplets/particles		(-)	N

(-): not applicable
T: YES
N: NO

4 Classification and its scope of application

4.1 Normative references

Classification was determined in accordance with PN-EN 13501-1+A1:2010.

4.2 Classification

In terms of its reaction to fire rice husk (silica) composite for façade profiles was classified as:

B

Considering generation of smoke, the product was additionally classified as:

s3

Considering presence of flaming droplets/particles, the product was additionally classified as:

d0

The classification format in terms of reaction to fire for construction materials, excluding floorings and linear products for thermal insulation of ducts, is as follows:

Fire properties		Smoke generation			Flaming droplets	
B	**-**	**s**	**3**	**1**	**d**	**0**

i.e.: B-s3,d0

Classification concerning reaction to fire: B-s3,d0

This classification report applies to final uses conforming to technical conditions that should be met by buildings and their location, and for a “non-flammable material with no flaming drops with integrity of the structure maintained during fire test” in accordance with the Regulation of Minister of Infrastructure of 12 April 2002 (Journal of Laws No. 75 of 15 June 2002, item 690, as amended).

4.3 - Applicability

This classification applies to the following parameters defining the product:

- Full/solid profiles described in section 2 of this classification report.
- Full/solid profiles fixed directly to or at any distance from bases of the fire class of at least A2-s3,d0 according to PN-EN 13501-1, or gypsum board.
- Full/solid profiles fixed mechanically in any layout to substructure of installation joists.

5 Limitations

The assigned classification will remain valid until:

- the test method is changed;
- the product standard or the product technical approval is changed;
- any construction and/or material changes are made exceeding the application scope specified in 4.3.

This classification report has been issued in 3 counterparts (2 for the Customer, 1 for the Fire Research Department, ITB). The certified copies can be issued by the Fire Research Department, ITB, only on request of the report Owner.

This classification document is not a product approval or certificate.

Signed by	Approved by
Łukasz Jarochowicz	acting Head of the Fire Research Department
	Bartłomiej K. Papis, PhD Eng.