DD GROUP

DD PEDESTALS
we support!

enviro lift

TECHNICAL SPECIFICATION

confirms the utility properties and usage in the building construction and the following characteristics of the product under the name

DD PEDESTALS (DDP)

support pads, fixed height pedestals and adjustable pedestals with accessories for raising and levelling outdoor terraces.

in the field and on the terms set out in this Specification

Validity
1st October 2022 r.

Issue. DDP01/2020
1st October 2020

DD PEDESTALS
DECK-DRY Polska Sp. z o.o.
80-307 Gdańsk, ul. Abrahama 48 PL
NIP 584-11-83-361 Regon 191118644
+48 511 04 31 32 +48 607 332 467
www.ddpedestals.eu

Chairman of the board
PREZES ZARZĄDU
arch. Grzegorz Baranowski

Attachement to this specification is Instruction manual and maintenance of DD PEDESTALS.
TECHNICAL SPECIFICATIONS contains 77 pages, 46 drawings, 19 charts. The text of this document should be used only in its entirety.
Publication or distribution in any other form, and/or fragments of the document requires the written permission of the manufacturer.

TABLE OF CONTENTS

01.00	CHARACTER OF SPECIFICATION	3
02.00	SUBJECT OF SPECIFICATION	4
03.00	PURPOSE, SCOPE AND CONDITIONS OF USE OF DD PEDESTALS	7
04.00	FEATURES TECHNICAL AND UTILITY. REQUIREMENTS	7
04.01	- Type of material	7
04.02	- Vicat softening point temperature	8
04.03	- Thermal stability (shrinkage)	8
04.04	- Shape and dimensions	8
04.05	- Design and finishing	8
04.06	- Resistance to statistical load pressure (table)	8
04.07	- Impact resistance	11
04.08	- Classification reaction to fire	11
05.00	PACKING, STORAGE, TRANSPORT	11
06.00	ASSEMBLANCE	12
07.00	DECLARATION OF UTILITY PROPERTIES	12
07.01	- General principles	12
07.02	- Initial type testing	12
07.03	- Manufacturer production control	13
07.04	- Finished products testing	13
07.05	- Tests frequency	13
07.06	- Checking the Vicat softening point temperature	13
07.07	- Checking thermal stability	13
07.08	- Shape and dimensions	13
07.09	- Checking the fit and finish	14
07.10	- Checking resistance to statistical load pressure	14
07.11	- Checking for impact resistance	14
07.12	- Sampling for testing	14

DECK-DRY POLSKA SP. Z O.O.
ABRAHAMA 48
80-307 GDAŃSK
NIP: 584-11-83-361

07.13	- Evaluation of test results	14
08.00	FORMAL AND LEGAL ARRANGEMENTS	14
08.01	- Usability of DD PEDESTALS in construction	14
08.02	- Violations of rights	15
08.03	- Responsibility of the Manufacturer	15
08.04	- Content published prospectuses and advertisements	15
09.00	EXPIRY	
10.00	ADDITIONAL INFORMATION	
11.00	TEST RESULTS AND DRAWINGS	
11.01	- Load pressure testing charts	
11.0	- Drawings	

DECK-DRY POLSKA SP. Z O.O.
ABRAHAMA 48
80-307 GDAŃSK
NIP: 584-11-83-361

01.00 CHARACTER OF SPECIFICATION

Technical Specifications is a document drawn up for products not subject to the requirements of Art. 9, paragraph 1 of the Act of 16.04.2004 on Construction Products (Journal of Laws No. 92/2004, pos. 881), which allows the evaluation of and issuing of the Declaration of Utility Performance of DD PEDESTALS (confirming the conformity of the products of this document) in order to present them to buyers. In accordance to european regulation due to that i.a. Adjustable Pedestals do not have harmonized standard final construction of raised terrace which consist including Adjustable Pedetals DDP need an of European Technical Assesment issued by contractor.

02.00 SUBJECT OF SPECIFICATION

The subject of the Technical Specification is product Adjustable Pedestals DDP DD PEDESTALS nazwane dalej manufactured by DECK-DRY Polska Sp. z o.o. 80-299 Wenus 73A Gdańsk Poland DD PEDESTALS and registration address DECK-DRY POLSKA SP. Z O.O. 80-307 GDAŃSK, Abrahama 48, Poland., e-mail address: sales@ddpedestals.eu, manufacturer registry address – DECK-DRY Polska Sp. z o.o., ul. Abrahama 48, 80-307 Gdańsk NIP PL5841183361, REGON: 191118644, KRS: 0000241286

Technical specification comprising DD PEDESTALS Adjustable Pedestal system with accessories for building outdoor raised terraces consist of:

l.p	SYMBOL HEIGHT	IMAGE	PRODUCT NAME
I	**PAVING SPACERS (PORCELAIN PAVER SPACERS, PLASTIC TILE SPACERS)**		
Paver cross spacers for laying under tiles to stabilize corners and gaps between terrace tiles. It prevents repositioning and unwanted movement of tiles. Tile cross spacers allow for laying a stable and even surface of the tiles (terrace). For laying directly on the ground (stabilized sand) or indirectly, e.g. on cement/sand filled bags, foundations/pads or other types of substrates / substructures. Paving spacers have built-in vertical ribs (fixed gap spacers) 3 mm thickness for fixing the gaps between the terrace elements being laid. In the main plate holes it is possible to additionally attach replaceable gap spacers (L3, L5). Paving tile spacers have the ability to cut in half and break out one vertical rib (fixed gap spacer) required when laying them along the edge (wall) or in the corners of the terrace. The surface of the paving spacers is 66.3 cm^2 (0,07sqf). The paving spacers can additionally be anchored in the ground with securing spikes inserted into the holes in the plate (optional; metal securing spikes not covered in this specification) *(Fig. 11.02.1, 11.02.2)*			
1	002B		PAVER TILE SPACER 2MM (0.08 ")
2	002R		PAVER TILE SPACER 2MM (0.08 ") RUBBER
3	002T		PAVER TILE SPACER 2MM (0.08 ") TRANSPARENT

DECK-DRY POLSKA SP. Z O.O.
ABRAHAMA 48
80-307 GDAŃSK
NIP: 584-11-83-361

II TILES SUPPORT PADS FOR PAVING

Tiles support pads for paving - non adjustable - fixed height pads (stackable "stacked on top of each other, max. 3 heights) for: assemblance (supporting) concrete, stone or porcelain terrace slabs, joists, wooden terraces, gratings, construction of floor surfaces, pavements, etc., outside construction, terraces, loggias, balconies, squares, also partially or completely roofed, etc. Fixed height (ie, "non smoothly" unregulated) bases in which each base has ribs (gap spacers) 3 mm (0 1/8 ") thickness; alternatively, joint spacers 5 mm (0 13/64 ") thickness (L5) can be additionaly attached to the main plate of support pads;

- Support pad 008 is made of partly flexible material (rubber) thanks to which the terrace elements are laid with additional soundproofing. You can stack them together. Base area 45 cm² (0,048 sqf).
- Support pads 010, 015, 016 are made up of 4 modules connected together - these modules can be broken into halves or quarters as needed to be laid along the wall or in the corners of the terrace. The same types of support pads can be stacked up to a maximum of 3 heights. Base surface 010 - 120 cm² (0,129 Sqf), 015 - 120 cm² (0,129 Sqf), 016 - 183 cm² (0,196 Sqf).
- Additionally, together with the support pads you can use rubber shims for additional leveling and soundproofing- for 008 matching model is (SH100), for 010 and 015 matching model is (SH145), for 016 matching model is (SH175).

(Fig. 11.02.3-10)

4	008		TILES SUPPORT PADS 8 MM (0.31 ")
5	010		TILES SUPPORT PADS 10 MM (0,39 ")
6	015		TILES SUPPORT PADS 15 MM (0.59 ")
7	016		TILES SUPPORT PADS 16 MM (0.63 ")

III ADJUSTABLE PEDESTAL SPIRAL SERIES

Adjustable pedestal SPIRAL series consisting of the bottom part BOTTOM and the top TOP with 1 mm height increment. The height range allows leveling in the range of 10-30 mm (0.39 - 1.2 "). Height adjustment is done by turning the halves relative to each other which causes the halves to be moved apart (the height of the pedestals is changed) by approx. 1 mm each step. The surface of the bottom of the BOTTOM bracket is 101 cm² (0.108 sqf).

- The TOP pedestal plate/head has holes in which it is possible to attach spacer tabs (L3 and L5) and an openings for fixing rotable spacer discs (D3 and D5). The adjustable pedestals spiral is also compatible with an adapter (AD) attached from above with latches for mounting decking joists.
- In order to level the slope/gradient of the TOP plate surface on the pedestal, the self-leveling head (LE MAX) can be attached to the TOP plate. The self-leveling head has an additional height of 20 mm (0.8 ").
- On the upper surface of the pedestal it is possible to lay rubber shim 1,5 mm (0 1/16 ")
- (SH145).

(Fig. 11.02.11-14)

DECK-DRY POLSKA SP. Z O.O.
ABRAHAMA 48
80-307 GDAŃSK
NIP: 584-11-83-361

8	010-017		ADJUSTABLE PEDESTAL SPIRAL 10-17 MM (0.39"-0.67")
9	017-030		ADJUSTABLE PEDESTAL SPIRAL 17-30 MM (0.67"-1,2")

IV ADJUSTABLE PEDESTALS STANDARD SERIES

Adjustable height ("smoothly") pedestals in the height range 30-420 mm (1.2 - 16.5 ") of the STANDARD series consisting of:

- Pedestal bases (P1, P2, P3, P4) with an base area 184 cm² (0.198 sqf). Pedestal bases has different heights, reinforced with 8 internal and external vertical ribs, with 4 holes in the lower part of base for water outflow from the inside of the base, and 4 holes for attaching/anchoring the bases to the ground (optional).
- Screws with different thread length (S1, S2, S3, S4) together with the upper pedestal plate/head for support with a diameter of 100 cm² (0.107 sqf). Top plate have holes with a diameter of 6.5 mm (0.3 ") for additional mounting elements as gap spacers / spacer tabs (L3, L5) and a joist adapter (AD).
- Screw nut (NN), which together are placed in the base top opening. For smooth height adjustment of the pedestal screw nut need to be rotated.
- On the surface of top pedestal plate it is possible to apply a rubber shim for leveling and soundproofing (SH100).
- To increase the height range of the pedestals, a height couple / distance sleeve (DS100) with a working height of 100 mm (3.9 ") is fitted "pressed" in the pedestal base top opening (P2, P3, P4), increasing the height of the pedestal adjustment by 100 mm (3.9 ").
- Screw nut (NN) adjusting the height together with the screw is located in the height coupler. To compensate for the slope on ground, self leveling can be laid on the pedestal head (LE).
- To correct the slope of the bottom surface of the pedestal base, SC MAX can be used as a base inclination corrector under the pedestal.

(Fig. 11.02.15-19)

10	030-045		ADJUSTABLE PEDESTAL STANDARD 30-45 MM (1.2-1.75 ")
11	045-070		ADJUSTABLE PEDESTAL STANDARD 45-70 MM (1.75-2.75 ")
12	070-120		ADJUSTABLE PEDESTAL STANDARD 70-120 MM (2.75-4.75 ")

DECK-DRY POLSKA SP. Z O.O.
ABRAHAMA 48
80-307 GDAŃSK
NIP: 584-11-83-361

13	120-220		ADJUSTABLE PEDESTAL STANDARD 120-220 MM (4.75-8.25 ")
14	220-320	 x1	ADJUSTABLE PEDESTAL STANDARD 120-220 MM (4.75-8.25 ") + 1* HEIGHT COUPLER DS100 100 MM (4 ") 220-320 MM (8.25-12.6 ")
15	320-420	 x2	ADJUSTABLE PEDESTAL STANDARD 120-220 MM (4.75-8.25 ") + 2* HEIGHT COUPLER DS100 100 MM (4 ") 320-420 MM (12.6-16.5 ")

V ADJUSTABLE PEDESTALS MAX SERIES

Adjustable height ("smoothly") pedestals in the height range 45-950 mm (1.77" - 3 ft 1.4 ") from the MAX series consist of:

- Pedestal base (P3) with area 346 cm^2 (0.372 sqf) with 16 external vertical ribs,with 4 holes in the lower part of base for water outflow from the inside of the base. Special undercuts in base additionally allow the attachment of tensioning cross-bracing pedestals for better stability - optional (not covered by this specification), 4 holes for anchoring the bases to the ground (optional), 4 collars in the base plate for fixing horizontal braces between the pedestals bases (optional).
- The sleeve nut (TN3) has an external thread screwed into the internal thread of the base and an internal thread into which the screw (S3) is screwed. The sleeve nut has a handle at the top consisting of 8 arms allowing its manual rotation (height adjustment). The handle also has 16 holes for attaching tension cross bracing the pedestals.
- Screw (S3) built from an external thread and a top plate of the pedestal with an area of 165 cm^2 (0.177 sqf). The upper plate of the bracket has holes with a diameter of 6.4 MM (0.3 ") for mounting gap spacers (L3, L5) and a joist adapter (AD). The surface of the top pedestal plate has a hole in which it is possible to mount rotable spacer discs D3 (1/8 inch) and D5 (13/64 ").
- To increase the height range of the pedestal a DS200 MAX height coupler with a working height of 200 mm (78.8 ") is used, screwed into the internal thread of the pedestal base top opening (P3).
- On the top pedestal plate to compensate slope, LE MAX self-leveling head can be attached.
- To compensate the slope of the bottom surface of the support base, SC MAX base inclination corrector under the base can be used.
- On the surface of the top pedestal plate it is possible to apply rubber shim 1,5 MM (1/16 ") (SH145)

(Fig. 11.02.20-27)

16	045-075		ADJUSTABLE PEDESTAL max 45-75 MM (1.77-2.95 ")
17	075-150		ADJUSTABLE PEDESTAL max 45-75 MM (2.95-5.9 ")

DECK-DRY POLSKA SP. Z O.O.
ABRAHAMA 48
80-307 GDAŃSK
NIP: 584-11-83-361

18	150-350		ADJUSTABLE PEDESTAL max 150-350 MM (5.90-13.80 ")
19	350-550	 x1	ADJUSTABLE PEDESTAL max 150-350 MM (5.90-13.80 ") + 1* HEIGHT COUPLER DS200 MAX 200 MM (8 ") 350-550 MM (13.80-21.7 ")
20	550-750	 x2	ADJUSTABLE PEDESTAL max 150-350 MM (5.90-13.80 ") + 2* HEIGHT COUPLER DS200 MAX 200 MM (8 ") 550-750 MM (21.7-29.5 ")
21	750-950	 x3	ADJUSTABLE PEDESTAL max 150-350 MM (5.90-13.80 ") + 3* HEIGHT COUPLER DS200 MAX 200 MM (8 ") 750-950 MM (29.5-37.4 ")
VI	**ACCESSORIES**		
22	DS100		HEIGHT COUPLER DS100 STANDARD Distance sleeve with a working height of 100 mm (3.94 "), fit in the pedetal base top opening (P2, P3, P4 STANDARD) to increase the height of the pedestals height regulation by 100 MM. (Fig. 11.02.28)
23	DS200		HEIGHT COUPLER DS200 MAX The DS200 (7.87 ") distance sleeve with a working height of 200 mm is attached by screwing it into the internal thread of the pedestal base (P3 MAX). The spacer sleeve increase the pedestal height range of the by 200 MM. (Fig. 11.02.29)
24	LE		SELF-LEVELING HEAD. 7% 16.5MM STANDARD Used to level the tilt of the surface of the upper pedestal top plate, the self-leveling head (LE STANDARD) attached to the latch, consisting of a lower and upper part, whose gyroscopic construction allows the upper part of the head to automatically adjust to the floor level in the range of 0-7% of the slope. The self-leveling head (LE STANDARD) has an additional height of 16 mm. The head consists of the upper part TOP and the lower part BOTTOM. The use of a

DECK-DRY POLSKA SP. Z O.O
ABRAHAMA 48
80-307 GDAŃSK
NIP: 584-11-83-361

			self-leveling head together with a bracket higher than 220 MM requires the addition of a 16MM (0.63 ") 8% SC BASE SLOP CORRECTION CORRECTOR. (Fig. 11.02.30)
25	DDPEDU		VERTICAL CLOSURE CLIPS - UPPER Facia board mounting clips. Installation is done by applying clips to the bottom base and the STANDARD pedestal screw top plate. Stainless steel 304. (Fig. 11.02.31)
26	DDPEDL		VERTICAL CLOSURE CLIP - LOWER Facia board mounting clips. Installation is done by applying clips to the bottom base and the STANDARD pedestal screw top plate. Stainless steel 304. *(Fig. 11.02.32)*
27	DDPWA		EDGE SPACER CLIP Space clip to use to have gap between terrace surface and border wall. Distance clips allow to make safe separation between wall and terrace. Clips allows to change gap width according to expandibility of the terrace material during years. Gap width adjustable from 12-4 mm. Stainless steel 304. *(Fig. 11.02.33)*
28	MAX LE		SELF-LEVELING HEAD MAX 19MM 6% Consisting of a lower and upper part, whose gyroscopic construction allows the upper part of the head to automatically adjust to the floor level in the range of 0-6% slope. The self-leveling head has an additional height of 20 mm(0.75 "). The head consists of the upper part TOP and the lower part BOTTOM. The use of a self-leveling head together with a bracket higher than 350 MM requires the addition of a 16MM 8% SC BASE SLOP CORRECTION CORRECTOR. (Fig. 11.02.34)
29	SC		BASE SLOP CORRECTOR 16MM 8% SC MAX base slope / inclination / gradient corrector whose wedge construction allows by rotating the lower and upper halves to align the axis of the bracket in the range of 0-8% of the slope. The additional height of the slope corrector is 16 mm (0.63 ". The corrector consists of the top TOP and BOTTOM bottom parts. (Fig. 11.02.35)
30	SH100-1.5		RUBBER SHIM ⌀100 1.5 MM 1/16 " Rubber SHIMS can be thicknessly used when laying terraces on terrace pedestals. In the event that there is a need to compensate for unevenness in the thickness of the terrace tiles, rubber pads are the best solution. They effectively prevent creaking and crackling of sand particles between the tile and the support top plate. In addition, they catch vibrations, thus soundproofing the entire terrace structure. It suit to STANDARD pedestals series and 8MM Support pads (008) (Fig. 11.02.36)

DECK-DRY POLSKA SP. Z O.O.
ABRAHAMA 48
80-307 GDAŃSK
NIP: 584-11-83-361

31	SH145-1.5		RUBBER SHIM ⌀145 1.5 MM 1/16 " Rubber SHIMS can be thicknessly used when laying terraces on terrace pedestals. In the event that there is a need to compensate for unevenness in the thickness of the terrace tiles, rubber pads are the best solution. They effectively prevent creaking and crackling of sand particles between the tile and the support top plate. In addition, they catch vibrations, thus soundproofing the entire terrace structure. It suit to SPIRAL, MAX series and 10MM, 15MM Support pads (010, 015) *(Fig. 11.02.37)*
32	SH175-1.5		RUBBER SHIM ⌀145 1.5 MM 1/16 " Rubber SHIMS can be thicknessly used when laying terraces on terrace pedestals. In the event that there is a need to compensate for unevenness in the thickness of the terrace tiles, rubber pads are the best solution. They effectively prevent creaking and crackling of sand particles between the tile and the support top plate. In addition, they catch vibrations, thus soundproofing the entire terrace structure. It suit to Support pads (016). *(Fig. 11.02.38)*
33	AD		JOIST ADAPTER Decking joist adapter. Fastened with snaps to the top plate of pedestals. Suit to the SPIRAL, STANDARD, MAX series pedestals. (Fig. 11.02.39)
34	L3		GAP SPACERS 3MM (1/8 ") Interchangeable joint spacers 3 mm (⅛ ") thickness; the spacers are used to obtain regular 3 mm thickness gaps between the terrace elements being laid. Push-fit spacers in the top plate of the pedestal. Suit te the SPIRAL, STANDARD, MAX series pedestals. (Fig. 11.02.40)
35	L5		GAP SPACERS 5MM (13/64 ") Interchangeable joint spacers 3 mm (13/64 ") thickness; the spacers are used to obtain regular 3 mm (13/64 ") thickness gaps between the terrace elements being laid. Push-fit spacers in the top plate of the pedestal. Suit te the SPIRAL, STANDARD, MAX series pedestals. *(Fig. 11.02.41)*
36	K3		CROSS SPACER 3 MM (⅛") Interchangeable cross spacer 3 mm (⅛") thickness. the spacers are used to obtain regular 3 mm thickness gaps between the terrace elements being laid. Push-fit spacers in the top plate of the pedestal. Suit to the STANDARD Series*(Fig. 11.02.42)*
37	D3		ROTABLE GAP SPACER DISCS 3 MM (⅛ ") 3 mm (⅛ ") spacer discs are used as spacers to obtain regular gaps between the terrace elements being laid. Push-fit in the holes of the upper cap of the SPIRAL and MAX pedestals. (Fig. 11.02.43)

DECK-DRY POLSKA SP. Z O.O.
ABRAHAMA 48
80-307 GDAŃSK
NIP: 584-11-83-361

38	D5		ROTABLE GAP SPACER DISCS 5 MM (13/64 ") 3 mm (13/64 ") spacer discs are used as spacers to obtain regular gaps between the terrace elements being laid. Push-fit in the holes of the upper cap of the SPIRAL and MAX pedestals. (Fig. 11.02.44)
39	SBR200/5		SBR RUBBER PAD 200x200x5 MM (0.2 ") SBR Rubber protection pads 5 mm (0.2 ") thickness used as isolation between the base of the pedestal and the top layer of the substrate (waterproofing, asphalt layer etc.) It is recommended to use them also in the case of possible connecting of layers (roofing felt, liquid insulation, etc.) especially due to heat. Rubber pads under the pedestals additionally soundproof the whole terrace structure. Can be optionally used.
40	SBR200/10		SBR RUBBER PAD 200x200x10 MM (0.4 ") SBR Rubber protection pads 10 mm (0.4 ") thickness used as isolation between the base of the pedestal and the top layer of the substrate (waterproofing, asphalt layer etc.) It is recommended to use them also in the case of possible connecting of layers (roofing felt, liquid insulation, etc.) especially due to heat. Rubber pads under the pedestals additionally soundproof the whole terrace structure. Can be optionally used.
41	MAX KEY		REGULATION KEY Metal regulation key for final height adjustments of MAX pedestals within gap between tiles. (Fig. 11.02.45)
42	BIT TOOL		DRILL DRIVER BIT TOOL For a pedestal assembly and height regulation. (Fig. 11.02.46)

03.00 PURPOSE, SCOPE AND CONDITIONS OF USE OF DD PEDESTALS

DD PEDESTALS spacers, support pads, adjustable pedestals are using to support and assemblance concrete, stone, porcelain or wood terrace tiles, wooden terrace joists, grating, pavement structure floors, sidewalks, etc. for use inside and outside of buildings, terraces, loggias, balconies, squares, plaza decks used by pedestrians also partially or fully roofed, etc.; for use in single-family and multi-family buildings, collective residential, sports and utilities buildings (does not apply to places of mass events burdened with crowd and emergency routes), and industrial; the possibility of deformation, cracks, change of color and static electricity, as well as making sounds during use, also using self-leveling heads; DD PEDESTALS Terrace pedestals are adopted for use in places exposed to direct external weather conditions, in the air temperature range from -30C to + 55C.

DD PEDESTALS should be used on stable and even surfaces, e.g.

- on concrete slabs (grinders) not insulated with water / moisture insulation or insulated with water / moisture insulation,
- on substrates which constitute anti-water insulation, e.g. heat-sealable roofing felt or insulation foil (on these substrates it is recommended to use SBR200 protection pads to protect the insulation against possible damage or connecting of the layers),

DECK-DRY POLSKA SP. Z O.O.
ABRAHAMA 48
80-307 GDAŃSK
NIP: 584-11-83-361

- on stone or wooden slabs,
- on concrete blocks / bricks,
- on compacted and / or stabilized soil,
- on openwork concrete slabs,
- on extruded polystyrene XPS (styrodur), recommended min. hardness is XPS200,
- on various types of floors,
- on substrates allowing drainage of rainwater or spilled water onto the terrace.

Attachment to this specification is Instruction manual and maintenance of DD PEDESTALS.

04.00 FEATURES TECHNICAL AND UTILITY. REQUIREMENTS

04.01 Type of material

For the production of DD PEDESTALS is used polypropylene for injection molding with additives (ethylene propylene copolymer) containing stabilizers and antioxidants, characterized by a Vicat softening point of 95 VST and an average thermal shrinkage ≤ 0.13%, according to PN-EN ISO 183-1 2000.

04.02 Vicat softening point temperature

Softening point according to Vicat polypropylene, determined according to PN-EN ISO 306: 2006, should not be lower than 95 VST.

04.03 Thermal stability (shrinkage)

Change of dimensions of DD PEDESTALS subjected to heating at 80 ° C for up to 60 min. should not be greater than 0.9%.

04.04 Shape and dimensions

The shape and dimensions of DD PEDESTALS are specified in the drawing and tab. No. 1. Dimension deviations do not exceed the intolerable dimensions specified in class C according to PN-EN 22768-1: 1999.

04.05 Design and finishing

The surfaces of the supplied DD PEDESTALS are suitably smooth, essentially even, without large blisters and large foreign bodies fused, i.e. defects that would encounter the use of DD PEDESTALS. It is allowed to have material mass joining lines, which, however, do not cause a decrease in durability and lifetime. DD PEDESTALS have plain uniform color, in accordance with the manufacturer's sample.

DECK-DRY POLSKA SP. Z O.O.
ABRAHAMA 48
80-307 GDAŃSK
NIP: 584-11-83-361

04.06 Resistance to statistical load pressure (table)

DD PEDESTALS maximum compressive eccentric load applied over the entire surface, not greater than specified in Table No. 2, within the permitted range of pedestals height adjustment.

Table No. 2

No	pedestal type [01]	tested pedestal height mm (")	maximum compressive eccentric load [10] acc vZLO kN [04]	max possible project loading kN [05]
a	b	c	d	e
PAVING SPACERS				
1	002 (2 MM)	2 (0.08 ")	>20[09]	10[09]
TILES SUPPORT PADS FOR PAVING				
2	008 (8 MM)	8 (0.31 ")	>20[09]	10
	008*2 (16 MM)	16 (8*2) (0.63 ")	19,60	9,80
	008*3 (24 MM)	24 (8*3) (0.94 ")	19,60	9,80
3	010 (10 MM)	10 (0,39 ")	19,59	9,79
	010*2 (20 MM)	20 (10*2) (0.79 ")	15,62	7,81
	010*3 (30 MM)	30 (10*3) (1.18 ")	15,52	7,81
4	015 (15 MM)	15 (0.59 ")	13,86	6,93
	015*2 (30 MM)	30 (15*2) (0.12 ")	12,48	6,24
	015*3 (45 MM)	45 (15*3) (0.18 ")	14,90	7,45
5	016 (16 MM)	16 (0.63 ")	19,60	9,8
	016*2 (32 MM)	32 (15*2) (1.26 ")	19,59	9,79
	016*3 (48 MM)	48 (15*3) (1.89 ")	19,59	9,79
ADJUSTABLE PEDESTAL SPIRAL SERIES				
6	010-017 (10-17 MM)	15 (0.59")	>20[09]	10
7	017-030 (17-30 MM)	25 (0.98")	>20[09]	10
ADJUSTABLE PEDESTALS STANDARD SERIES				
8	030-045 STANDARD (30-45 MM)	37,5 (14.76 ")	11,41	5,70
9	045-070 STANDARD (45-70 MM)	70 (2.76 ")	9,69	4,84

DECK-DRY POLSKA SP. Z O.O
ABRAHAMA 48
80-307 GDAŃSK
NIP: 584-11-83-361

10	070-120 STANDARD (70-120 MM)	120 (4.72 ")	9,25	4,62
11	120-220 STANDARD (120-220 MM)	220 (8.66")	9,66	4,83
12	120-220 MM STANDARD + 1* DS100 (220-320 MM)	320 (12.6 ")	9,33	4,66
13	120-220 MM STANDARD + 2* DS100 (320-420 MM)	420 (16.54 ")	9,69	4,84
ADJUSTABLE PEDESTALS MAX SERIES				
14	045-075 (45-75 MM)	60 (2.36")	11,76	5,83
15	075-150 MAX (75-150 MM)	112 (4.40")	12,63	6,31
16	150-350 MAX (150-350 MM)	350 (13.78 ")	15,88	7,94
17	150-350 MAX + 1*DS200 MAX (350-550 MM)	550 (21.65 ")	15,61	7,80
18	150-350 MAX + 2*DS200 MAX (550-750 MM)	750 (29.53 ")	15,79	7,89
19	150-350 MAX + 3*DS200 MAX (750-950 MM)	950 (37.4 ")	16,75	8,37

[01] – possibility of manufacturing DD PEDESTALS pedestals with flammability class V1 or V0 (→ section 4.8),,

[02] – maximum central load according to the Factory Loading Laboratory (ZLO), determines the resistance of DD PEDESTALS supports to central vertical destructive loads according to PN-EN 12825: 2002 + Ap1: 2005, i.e. determines the maximum central force destroying the support,

[03] – maximum allowable design load, including a minimum of safety factor k = 2.0 depending on technological conditions, operating conditions, type of load, permissible errors, etc. (to comply with safety requirements and standards)

[07] – in the case of non-axial or dynamic (impact) load (as a result of e.g. pedestrian traffic or vehicles), etc., in order to determine the appropriate values of the safety factor - the maximum allowable design load should be calculated taking into account the specific conditions of the given design intent using max safety factor

[09] – the value given was taken; no tests were carried out above approx. 20 kN (> 20.00 kN),,

[10] – load resulting from a short-term effect of force on the pedestals in laboratory conditions.

04.07 Impact resistance

The pedestals are not damaged or damaged as a result of the impact falling from a height of 1 m. 1 kg weight. In the event of the possibility of unforeseen dynamic loads such as military marching, public gatherings, raids of equipment and vehicles causing dynamic or non-axial loads of pedestals, the permissible load should be recalculated in order to determine the limit values for a given design / investment project; in the absence of calculation of the permissible load for vehicle traffic (specifying the permissible types and max weight of vehicles),

DECK-DRY POLSKA SP. Z O.O.
ABRAHAMA 48
80-307 GDAŃSK
NIP 584-11-83-361

wheeled and mechanical vehicles cannot be allowed to move on floors supported by DD PEDESTALS. If there is a risk of approaching the floor supported by the pedestals through a motor vehicle, the floor should be fenced in a way that prevents it. The permissible crowd load may not exceed, together with the floor weight, the maximum design load indicated in Table No. 2. It is not allowed to jump from the height to the floor supported on the Adjustable pedestals due to the possible occurrence of "point" / local temporary dynamic non-axial loads exceeding permissible, which may result in damage to the pedestals or damage the floor structure.

04.08 Classification reaction to fire

DD PEDESTALS have the classification in reaction to fire "E (Classification reaction to fire according to PN-EN 13501-1: 2019-02 made by laboratory ITB 02327/19 / Z00NZP. Possibility of making, on special demand, DD PEDESTALS V1, V0 material , which have a classification reaction to fire to fire B-s3, d0 according to PN-EN 13501-1: 2019-02 made by laboratory ITB 02327/19 / Z00NZP applicable to end applications in accordance with the technical conditions that buildings and their location should meet, and how for a product "non-inflammable, self-extinguishing, non-dripping and non-dripping under the influence of fire and non-spreading fire"

05.00 PACKING, STORAGE, TRANSPORT

Products are delivered in boxes that protecting DD PEDESTALS against mechanical damage. Finished products are stored and transported in accordance with the Manufacturer's Instructions in a way that ensures their technical properties remain unchanged. Each package is accompanied by a label containing at least the following data: name and address of the Manufacturer, name, designation and marking of the product, basic data of the product.

06.00 ASSEMBLANCE

DD PEDESTALS must be installed by qualified and experienced assembly installers and must be used in accordance with good engineering practice. It is necessary to take into consideration in each project specific circumstances and conditions for a given implementation and adjust the proper use of pedestals so that the use of the floor does not endanger the life or health of users, including:

- a). The floor should be installed and executed in such a way that the assembly process does not cause damages to the pedestals (including invisible damages that may show up themselves after a long period of use).
- b.) Pedestals should have a proper contact of the pedestal base surface with the ground, i.e. the pedestals must be placed on an even and stable ground without causing non-axial material stress.
- c.) Pedestals top plate surface should evenly fay to the floor surface, i.e. the pedestals plate must adhere to the leveled floor with the entire surface; all pedestals must carry the weight of the floor evenly.
- d.) Maintaining proper distances between the pedestals under the floor, i.e. the pedestals should be placed under the floor at distances not only ensuring proper distribution of the permissible floor load, but also the distance between the pedestals must ensure floor stability and proper even loading of the pedestals.
- e.) Pedestals maximum height should be adjusted to the design intent, as the maximum height ranges provided by the manufacturer are not achievable in every case.
- f.) Installation of the pedestals may be carried out by the manufacturer or entities authorized by him.

07.00 DECLARATION OF UTILITY PROPERTIES

07.01 General principles

The Technical Specification is a document drawn up for products not subject to the requirements of Art. 9. item 1. of the Act of 16 April 2004 on construction products (Journal of Laws No. 92/2004, item 881). It is a description of the product features in order to present them to the recipients of the products and enabling them to assess compliance with standards and to issue a Declaration of Utility Properties. Technical and operational properties of the products are confirmed by the product Manufacturer. The basis for conformity assessment are:

- a.) initial type testing
- b.) manufacturer production control

07.02 Finished products testing

Finished product testing is a test confirming the required technical and operational properties, performed before the product is placed on the market.

Finished products testing contains:

- a.) checking the Vicat softening point temperature
- b.) checking thermal stability

DECK-DRY POLSKA SP. Z O.O.
ABRAHAMA 48
80-307 GDAŃSK
NIP: 584-11-83-361

- c.) shape and dimensions
- d.) checking resistance to statistical load pressure
- e.) checking for impact resistance

07.03 Manufacturer production control

Manufacturer production control contains :

- a.) a.) Specification of materials and verification of attestation documents confirming their properties in accordance with the requirements specified in paragraph 4,,
- b.) Control and research in the production process and testing of finished products carried out by the Manufacturer in accordance with the established test plan and according to the principles and procedures specified in the documentation of factory production control, adapted to the production technology and aimed at obtaining the required properties of the products; production control ensures that the product complies with the Technical Specification; the results of the checks are systematically recorded; records in the register should confirm that the products meet the criteria for assessing compliance with standards; each batch of products is uniquely identified in the test register and commercial documents.

07.04 Finished products testing
Tests of finished products include checking the shape and dimensions as well as the quality of the pedesatls and finish.

07.05 Tests frequency
Tests of finished products should be carried out in accordance with the established test plan, but not less frequently than for each batch of products. The size of the product batch should be specified in the factory production documentation.

07.06 Checking the Vicat softening point temperature
The test is performed according to PN-EN ISO 306: 2006. The test results are compared to the requirements according to 4.02..

07.07 Checking thermal stability
The test is performed according to PN-EN 479: 1997. The results are compared with the requirements according to 4.03.

07.08 Shape and dimensions
Shape and dimensions test is performed by examining the pedestals with an eye look in a well-lit room from a distance of about 0.2-0.5 m and compared with the relevant drawings. The dimensions are checked by means of universal measuring instruments ensuring the measurement accuracy resulting from the tests according to point 4.04.

07.09 Checking the fit and finish
Checking the performance and finishing is performed by examining the pedestals with eye look in a well-lit room from a distance of about 0.2-0.5 m for compliance with the requirements according to 4.05.

07.10 Checking resistance to statistical load pressure
The test is performed according to PN-EN 12825: 2002 + Ap1: 2005. The posting results are compared with the data from point 4.06.

07.11 Checking for impact resistance
The test is performed according to PN-EN 477: 1997. Test results are compared with data point 4.07.

07.12 Sampling for testing
Samples for testing are taken at random, in accordance with PN-N-03010: 1983.

07.13 Evaluation of test results
Products are considered to comply with this Specification if the results of all tests are positive.

DECK-DRY POLSKA SP. Z O.O
ABRAHAMA 48
80-307 GDAŃSK
NIP: 584-11-83-361

08.00 FORMAL AND LEGAL ARRANGEMENTS

08.01 Suitability for use in the building construction DD PEDESTALS. Technical specification issued by DECK-DRY Polska Sp. z o.o. determines the technical conditions and confirms the suitability for use in construction of the product - the DD PEDESTALS adjustable pedestals system with accessories as a part of the terrace structure. Terrace pedestals are not a built-in building element on their own.

The rules for bringing construction products on the market after May 1, 2004 are set out in the Act on construction products of April 16, 2004 (Journal of Laws No. 92/2004, item 881) and implementing regulations to this Act. The requirements of this Act apply to products covered by mandates granted by the European Commission for the development of harmonized European standards or guidelines for European Technical Approvals (the list of mandates is included in the announcement of the Minister of Infrastructure of July 5, 2004 - No. 32/2004, item 571).

Because the product - paving spacers, support pads, adjustable pedestals are not covered by mandates and harmonized European Union standards, therefore Technical Approvals, National Technical Assessments are not required. The final product, which is a raised paver/decking floor in the form of a raised, including of Terrace Pedestals DD Pedestals in accordance with the regulations requires obtaining a National Technical Assessment developed on the basis of the applied and embedded technological solution.

08.02 Violations of rights

The Technical Specification does not infringe the rights arising from the provisions on the protection of industrial property rights, in particular the Notice of 13 June 2003 on the publication of a uniform text of the Act of 30 June 2000 - Industrial Property Law (Journal of Laws No. 119 item 1117).

08.03 Responsibility of the Manufacturer

By issuing the Technical Specification, the Producer takes responsibility for any violation of exclusive and / or acquired rights. The Technical Specification does not release the Manufacturer from liability for the proper quality of products and contractors/installers of construction works from the responsibility for their proper application and good engineering practice.

08.04 Content published prospectuses and advertisements

The content of issued prospectuses and announcements as well as other documents related to the bringing on the market and the use of DD PEDESTALS should have information about the present Technical Specification.

09.00 EXPIRY

The Technical Specification is valid until 30 June 2020. The validity of the Specification may be extended for subsequent periods and updated if any parameters change.

10.00 ADDITIONAL INFORMATION

Related standards and documents:

PN-EN 477: 1997 - Profiles made of non-plasticized polyvinyl chloride (PVC-U) for the production of windows and doors. Determining the resistance of the main sections to the impact of a falling weight.

PN-EN 479: 1997 - Profiles made of non-plasticized polyvinyl chloride (PVC-U) for the production of windows and doors. Determination of thermal shrinkage.

PN-EN 22768-1: 1999 - General tolerances. Tolerances on linear and angular dimensions without individual tolerance markings.

PN-EN ISO 306: 2006 - Plastics. Thermoplastics. Determination of the softening point by the Vicant method (VST).

PN-EN ISO 604: 2006 - Plastics. Determination of compression properties.

PN-EN ISO 1873-1: 2000 - Plastics. Polypropylene (PP) for injection molding and extrusion. Designation system and basis for classification.

PN-C-89110.06: 1075 - Plastic products. Technological disadvantages of injection products.

DECK-DRY POLSKA SP. Z O.O.
ABRAHAMA 48
80-307 GDAŃSK
NIP: 584-11-83-361

PN-N-03010: 183 - Statistical quality control. Random selection of product units for the sample.

11.00 TEST RESULTS AND DRAWINGS

11.01 Load pressure testing charts

Tab. 11.01.01 - Maximum compressive eccentric load PAVER TILE SPACER 2MM (0.08 ")

DECK-DRY POLSKA SP. Z O.O.

Tensile Test Report

		Operator:		Test Date:	9/6/2018
Material Name :	DDP002	Test Standard:	PN-EN 12825:2002+Ap1:2005	Specifications	0.2*1.5
Test2.000mm/min	2.000mm/min	Gauge Length:	50.000mm		

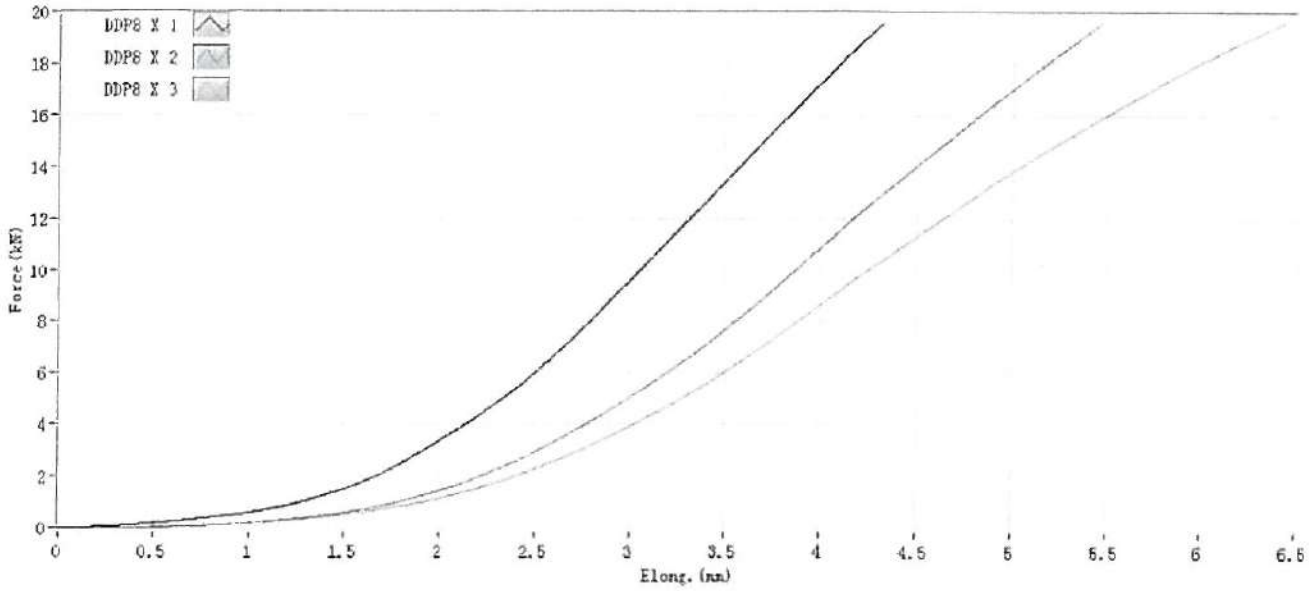

No.	Force @ Peak (kN)	Elong. @ Peak (mm)
1	19.597	4.33
2	19.605	5.465
3	19.607	6.43
Maximum	19.607	6.43
Minimum	19.597	4.33

DECK-DRY POLSKA SP. Z O.O.
ABRAHAMA 48
80-307 GDAŃSK
NIP: 584-11-83-361

Tab. 11.01.02 - Maximum compressive eccentric load TILES SUPPORT PADS 8 MM (0.31 ")

DECK-DRY POLSKA SP. Z O.O.

Tensile Test Report

		Operator:		Test Date:	9/6/2018
Material Name :	DDP8	Test Standard:	PN-EN 12825:2002+Ap1:2005	Specifications	0.2*1.5
Test2.000mm/min	2.000mm/min	Gauge Length:	50.000mm		

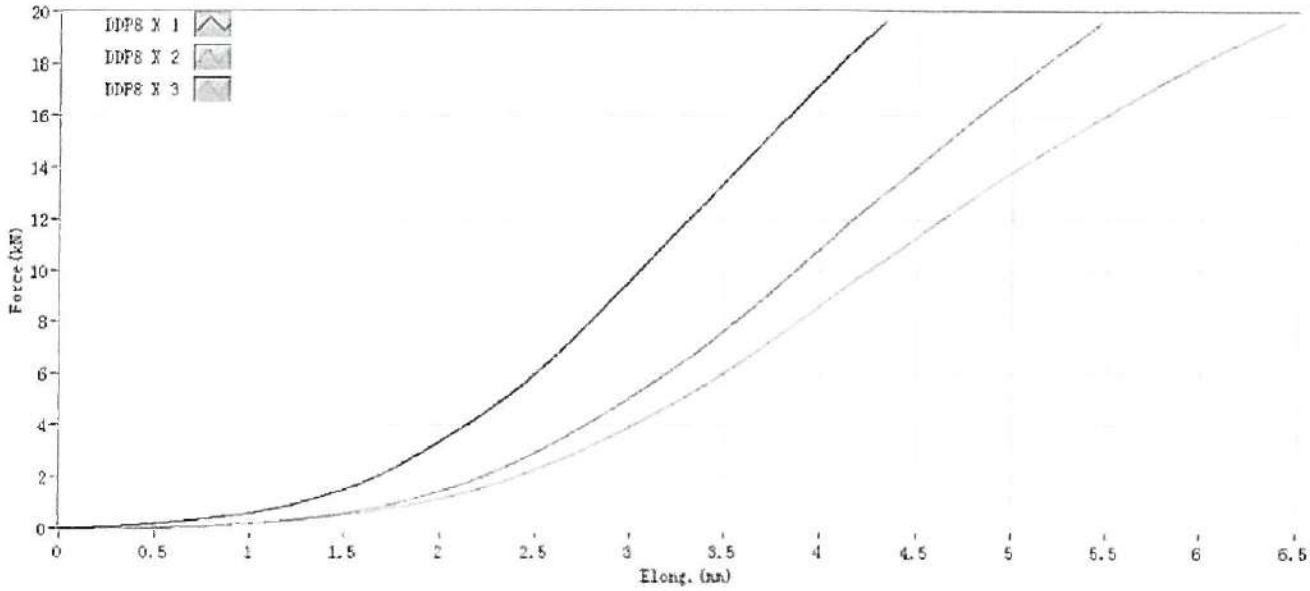

No.	Force @ Peak (kN)	Elong. @ Peak (mm)
1	19.597	4.33
2	19.605	5.465
3	19.607	6.43
Maximum	19.607	6.43
Minimum	19.597	4.33

DECK-DRY POLSKA SP. Z O.O.
ABRAHAMA 48
80-307 GDAŃSK
NIP: 584-11-83-361

Tab. 11.01.03 - Maximum compressive eccentric load TILES SUPPORT PADS 10 MM (0,39 ")

DECK-DRY POLSKA SP. Z O.O.

Tensile Test Report

		Operator:		Test Date:	9/6/2018
Material Name:	DDP010	Test Standard:	PN-EN 12825:2002+Ap1:2005	Specifications	0.2*1.5
Test2.000mm/min	2.000mm/min	Gauge Length:	50.000mm		

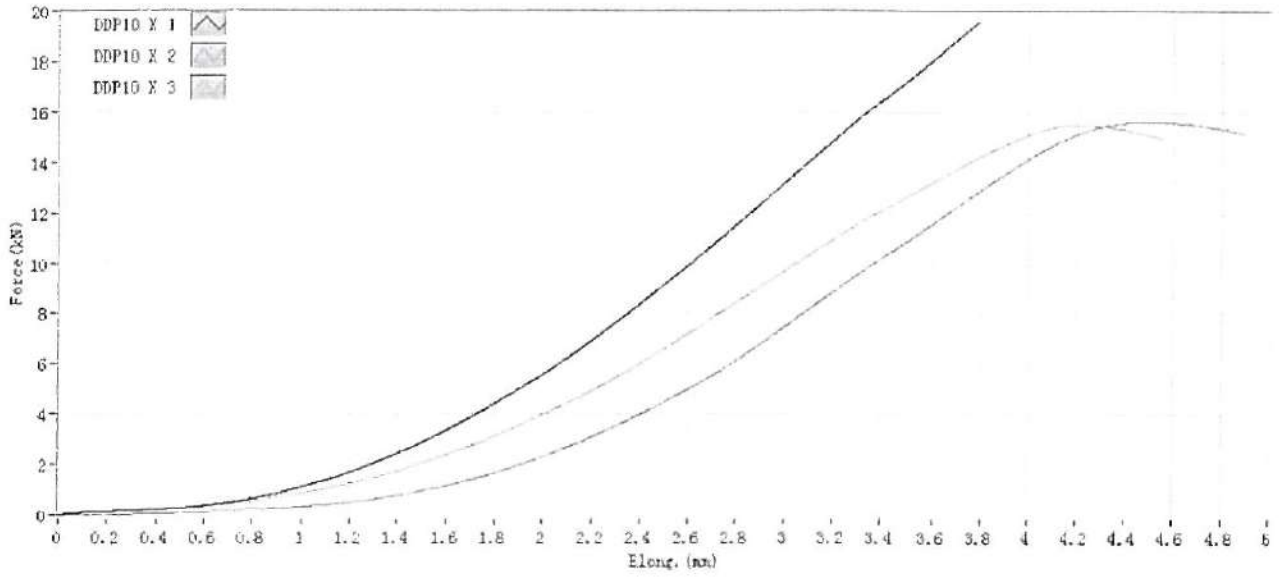

No.	Force @ Peak (kN)	Elong. @ Peak (mm)
1	19.593	3.786
2	15.627	4.498
3	15.528	4.201
Maximum	19.593	4.498
Minimum	15.528	3.786

DECK-DRY POLSKA SP. Z O.O.
ABRAHAMA 48
80-307 GDAŃSK
NIP: 584-11-83-361

Tab. 11.01.04 - Maximum compressive eccentric load TILES SUPPORT PADS 15 MM (0.59 ")

DECK-DRY POLSKA SP. Z O.O.

		Operator:		Test Date:	9/6/2018
Material Name:	DDP015	Test Standard:	PN-EN 12825:2002+Ap1:2005	Specifications	0.2*1.5
Test2.000mm/min	2.000mm/min	Gauge Length:	50.000mm		

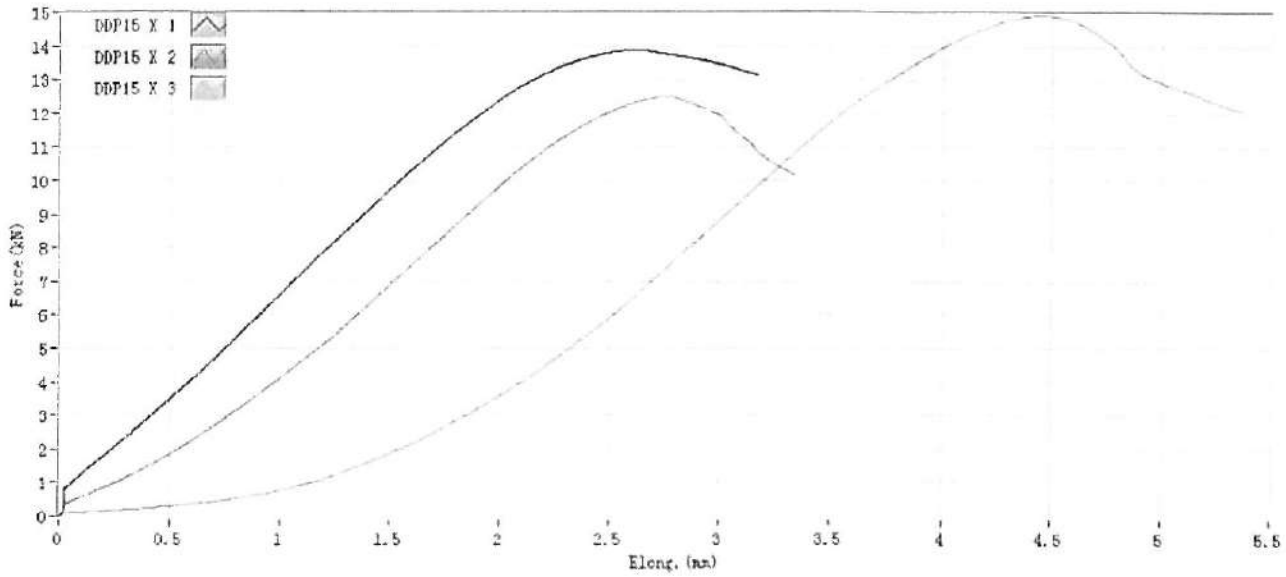

No.	Force @ Peak (kN)	Elong. @ Peak (mm)
1	13.868	2.621
2	12.484	2.769
3	14.909	4.446
Maximum	14.909	4.446
Minimum	12.484	2.621

DECK-DRY POLSKA SP. Z O.O.
ABRAHAMA 48
80-307 GDAŃSK
NIP: 584-11-83-361

Tab. 11.01.05 - Maximum compressive eccentric load TILES SUPPORT PADS 16 MM (0.63 ")

DECK-DRY POLSKA SP. Z O.O.

Tensile Test Report

		Operator:		Test Date:	9/6/2018
Material Name:	DDP016	Test Standard:	PN-EN 12825:2002+Ap1:2005	Specifications	0.2*1.5
Test2.000mm/min	2.000mm/min	Gauge Length:	50.000mm		

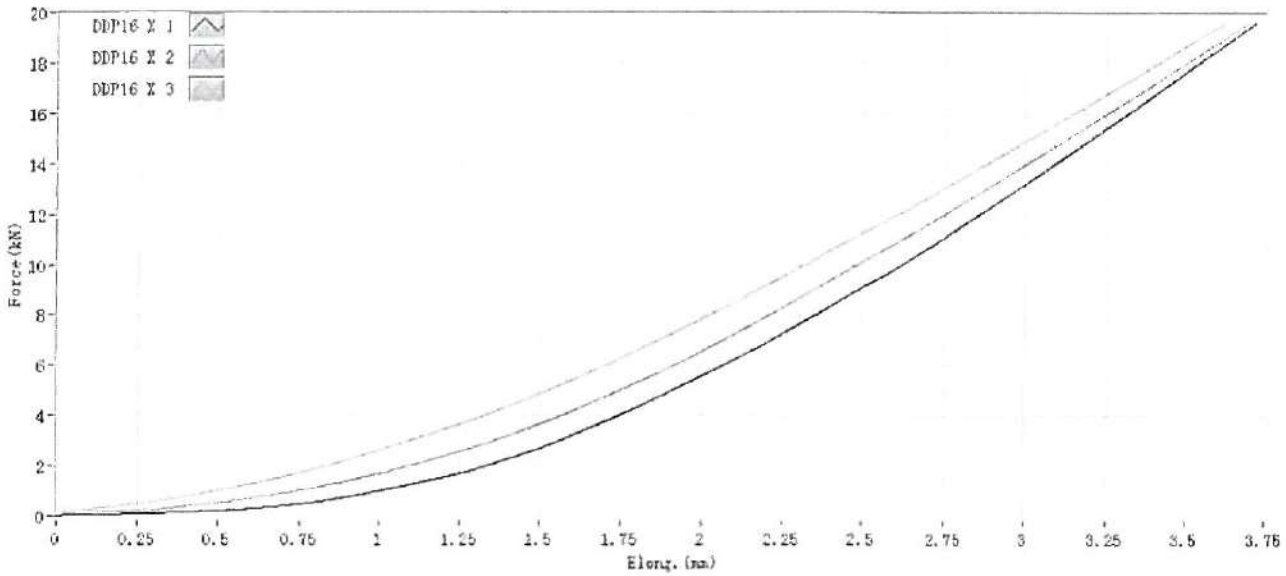

No.	Force @ Peak (kN)	Elong. @ Peak (mm)
1	19.6	3.716
2	19.591	3.695
3	19.596	3.619
Maximum	19.6	3.716
Minimum	19.591	3.619

DECK-DRY POLSKA SP. Z O.O.
ABRAHAMA 48
80-307 GDAŃSK
NIP. 584-11-83-361

Tab. 11.01.06 - Maximum compressive eccentric load ADJUSTABLE PEDESTAL SPIRAL 10-17 MM (0.39"-0.67")

DECK-DRY POLSKA SP. Z O.O.

Tensile Test Report

		Operator:		Test Date:	1/10/2020
Material Name:	DDP-010-017	Test Standard:	PN-EN 12825:2002+Ap1:2005	Specifications	0.2*1.5
Test2.000mm/min	2.000mm/min	Gauge Length:	50.000mm		

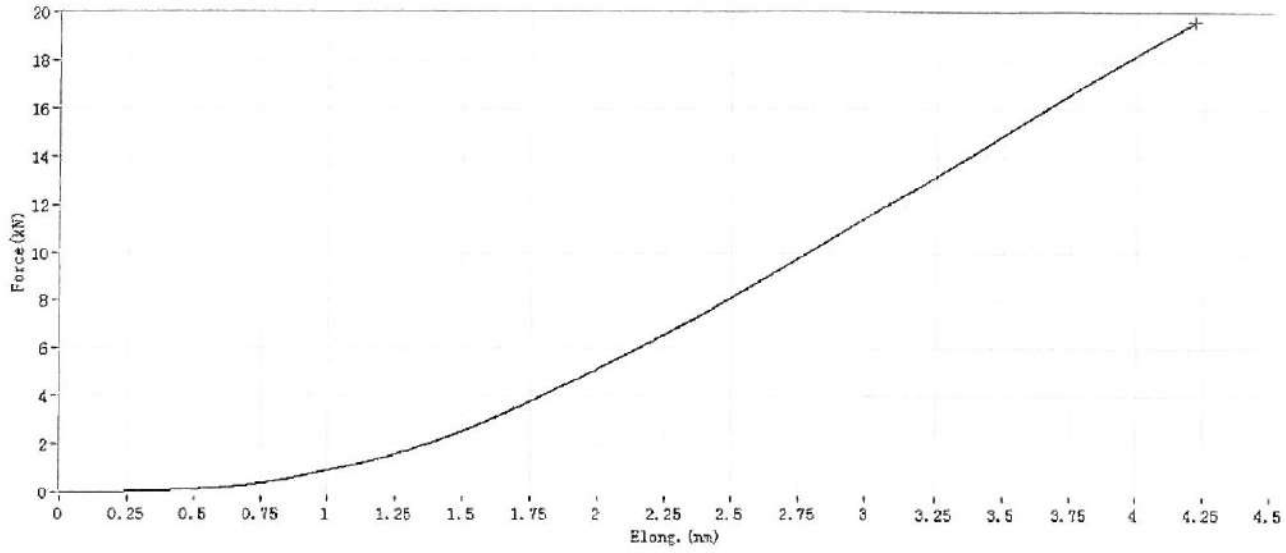

No.	Force @ Peak (kN)	Elong. @ Peak (mm)
1		

DECK-DRY POLSKA SP. Z O.O
ABRAHAMA 48
80-307 GDAŃSK
NIP: 584-11-83-361

Tab. 11.01.07 - Maximum compressive eccentric load ADJUSTABLE PEDESTAL SPIRAL 17-30 MM (0.67")

DECK-DRY POLSKA SP. Z O.O.

Tensile Test Report

		Operator:		Test Date:	10/2/20208
Material Name:	DDP-017-030	Test Standard:	PN-EN 12825:2002+Ap1:2005	Specifications	0.2*1.5
Test2.000mm/min	2.000mm/min	Gauge Length:	50.000mm		

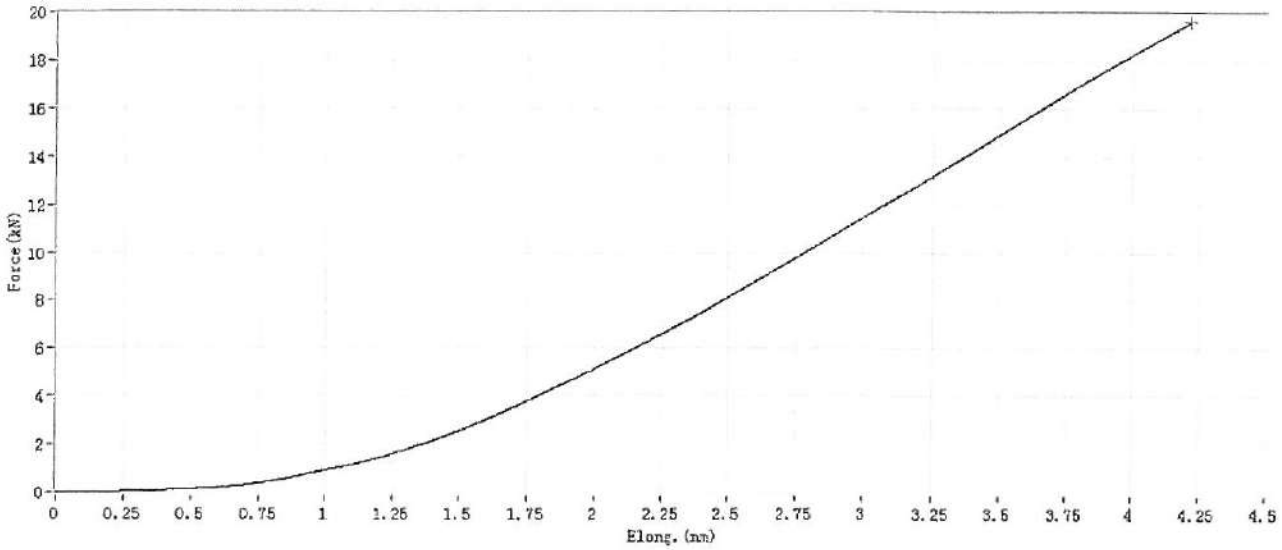

No.	Force @ Peak (kN)	Elong. @ Peak (mm)
1	19.601	4,214

DECK-DRY POLSKA SP. Z O.O.
ABRAHAMA 48
80-307 GDAŃSK
NIP: 584-11-83-361

Tab. 11.01.08 - Maximum compressive eccentric load ADJUSTABLE PEDESTAL STANDARD 30-45 MM (1.2-1.75 ")

DECK-DRY POLSKA SP. Z O.O.

Tensile Test Report

Customer Name:	DDP-030-045	Operator:	Test Date:	9/16/19 18:23
Material Name:		Test Standard:	Specifications	
Test2.000mm/min	2.000mm/min	Gauge Length:		

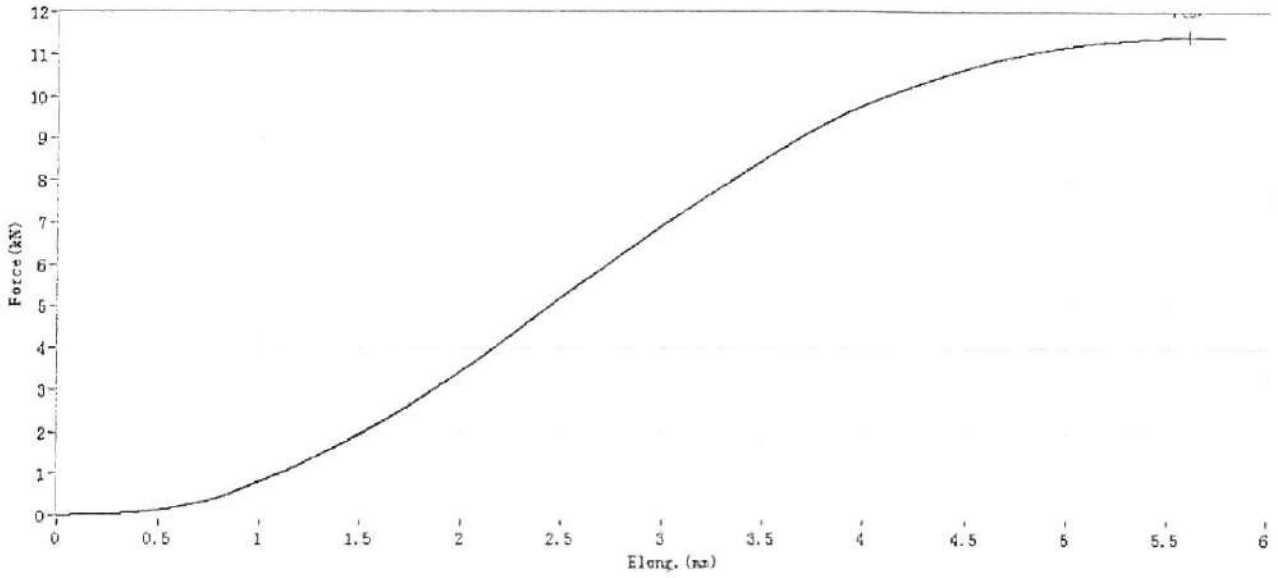

No.	Force @ Peak (kN)	Elong. @ Peak (mm)
1	11.419	5.597

DECK-DRY POLSKA SP. Z O.O.
ABRAHAMA 48
80-307 GDAŃSK
NIP: 584-11-83-361

Tab. 11.01.09 - Maximum compressive eccentric load ADJUSTABLE PEDESTAL STANDARD 45-70 MM (1.75-2.75 ")

DECK-DRY POLSKA SP. Z O.O.

Tensile Test Report

Customer Name:		Operator:	Test Date:	9/16/19 18:34
Material Name:	DDP-045-070	Test Standard:	Specifications	
Test2.000mm/min	2.000mm/min	Gauge Length:		

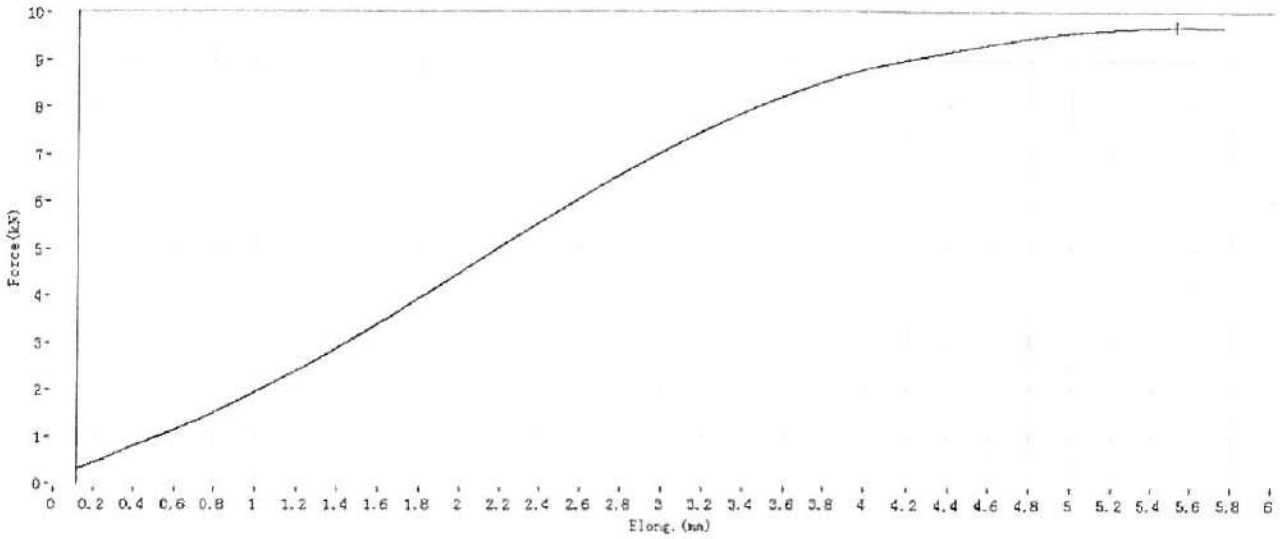

No.	Force @ Peak (kN)	Elong. @ Peak (mm)
1	9.696	5.518

DECK-DRY POLSKA SP. Z O.O
ABRAHAMA 48
80-307 GDAŃSK
NIP: 584-11-83-361

Tab. 11.01.10 - Maximum compressive eccentric load ADJUSTABLE PEDESTAL STANDARD 70-120 MM (2.75-4.75 ")

DECK-DRY POLSKA SP. Z O.O.

Tensile Test Report

Customer Name:		Operator:	Test Date:	9/16/19 18:40
Material Name:	DDP-070-120	Test Standard:	Specifications	
Test2.000mm/min	2.000mm/min	Gauge Length:		

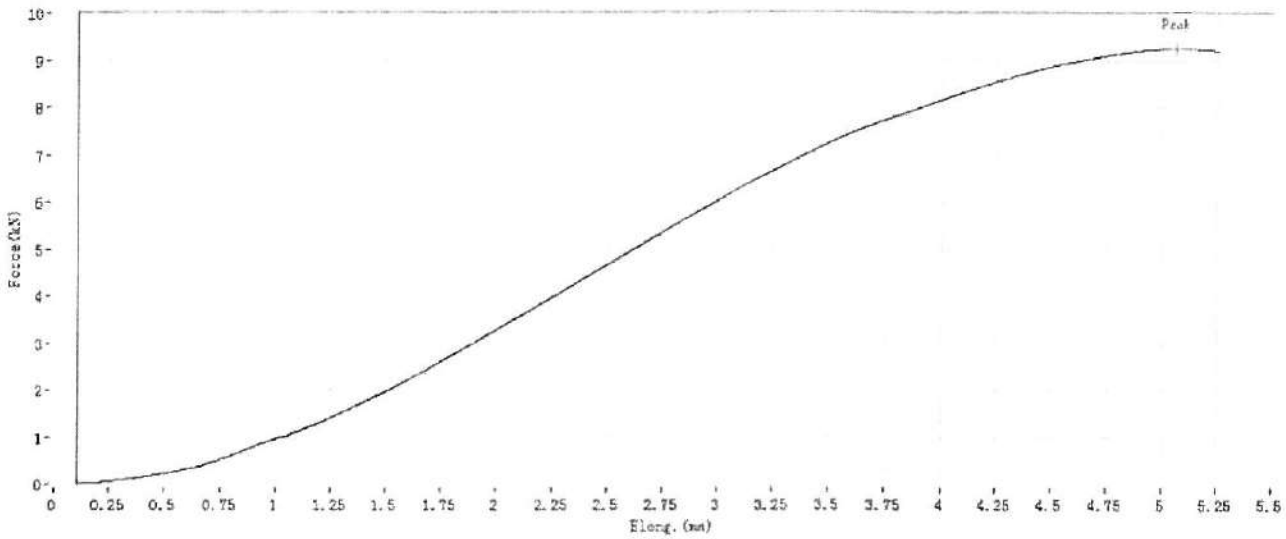

No.	Force @ Peak (kN)	Elong. @ Peak (mm)
1	9.252	5.06

DECK-DRY POLSKA SP. Z O.O.
ABRAHAMA 48
80-307 GDAŃSK
NIP: 584-11-83-361

Tab. 11.01.11 - Maximum compressive eccentric load ADJUSTABLE PEDESTAL STANDARD 120-220 MM (4.75-8.25 ")

DECK-DRY POLSKA SP. Z O.O.

Tensile Test Report

Customer Name:		Operator:	Test Date:	9/16/19 18:51
Material Name:	DDP-120-220	Test Standard:	Specifications	
Test2.000mm/min	2.000mm/min	Gauge Length:		

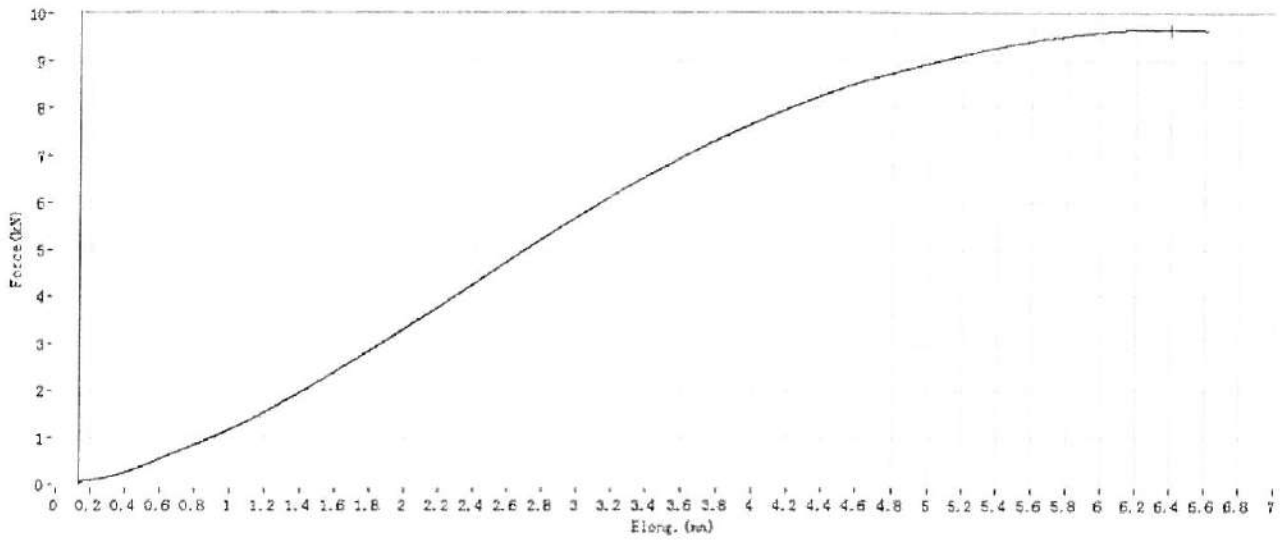

No.	Force @ Peak (kN)	Elong. @ Peak (mm)
1	9.665	6.399

DECK-DRY POLSKA SP. Z O.O.
ABRAHAMA 48
80-307 GDAŃSK
NIP: 584-11-83-361

Tab. 11.01.12 - Maximum compressive eccentric load ADJUSTABLE PEDESTAL STANDARD 120-220 MM (4.75-8.25 ") + 1* HEIGHT COUPLER DS100 100 MM (4 ") 220-320 MM (8.25-12.6 ")

DECK-DRY POLSKA SP. Z O.O.

Tensile Test Report

Customer Name:		Operator:	Test Date:	9/16/19 18:57
Material Name:	DDP-120-220+ DS-100	Test Standard:	Specifications	
Test2.000mm/min	2.000mm/min	Gauge Length:		

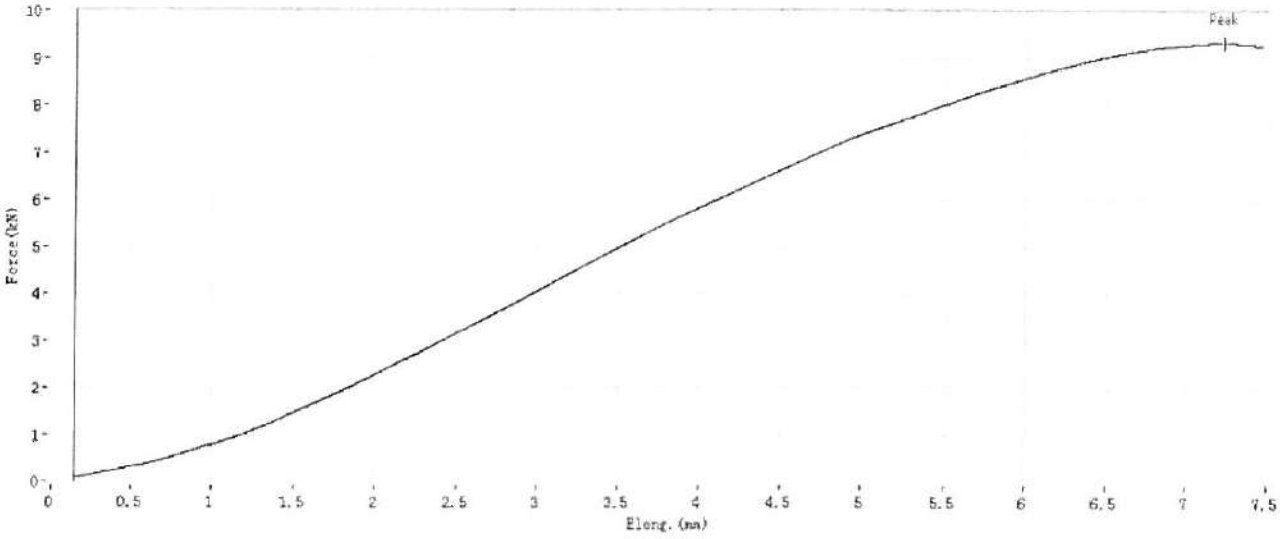

No.	Force @ Peak (kN)	Elong. @ Peak (mm)
1	9.331	7.227

DECK-DRY POLSKA SP. Z O.O.
ABRAHAMA 48
80-307 GDAŃSK
NIP: 584-11-83-361

Tab. 11.01.13 - Maximum compressive eccentric load REGULOWANY WSPORNIK 120-220 (120-220 MM) + 2* TULEJA DYSTANSOWA DS100 STANDARD (100 MM)

DECK-DRY POLSKA SP. Z O.O.

Tensile Test Report

Customer Name:		Operator:	Test Date:	9/16/19 19:05
Material Name:	DDP-120-220+ 2xDS-100	Test Standard:	Specifications	
Test2.000mm/min	2.000mm/min	Gauge Length:		

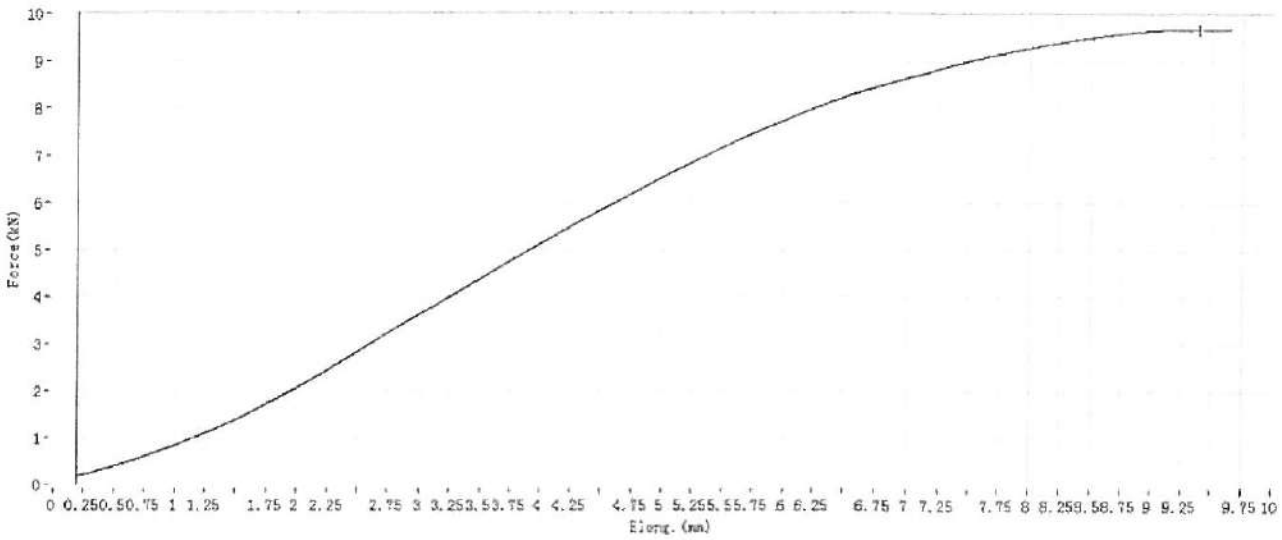

No.	Force @ Peak (kN)	Elong. @ Peak (mm)
1	9.692	9.385

DECK-DRY POLSKA SP. Z O.O.
ABRAHAMA 48
80-307 GDAŃSK
NIP: 584-11-83-361

Tab. 11.01.14 - Maximum compressive eccentric load ADJUSTABLE PEDESTAL MAX 045-075 MM (1.77-2.95 ")

DECK-DRY POLSKA SP. Z O.O.

Tensile Test Report

Customer Name:		Operator:	Test Date:	1/10/2020
Material Name:	DDP-MAX-045-075	Test Standard:	Specifications	
Test2.000mm/min	2.000mm/min	Gauge Length:		

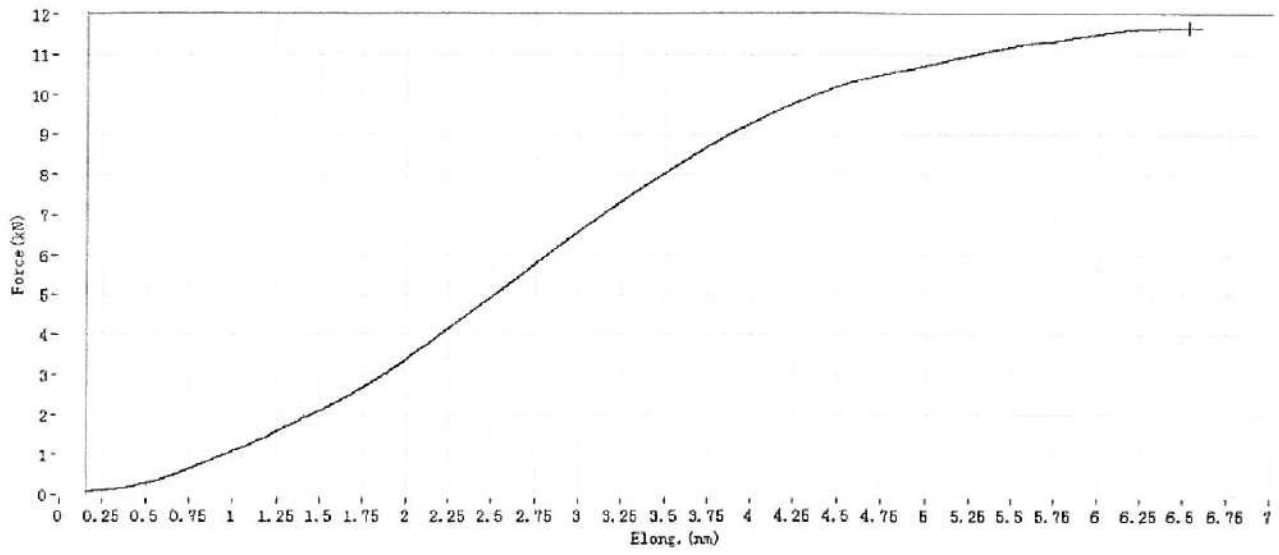

No.	Force @ Peak (kN)	Elong. @ Peak (mm)
1	11,67	6,52

DECK-DRY POLSKA SP. Z O.O.
ABRAHAMA 48
80-307 GDAŃSK
NIP: 584-11-83-361

Tab. 11.01.15 - Maximum compressive eccentric load ADJUSTABLE PEDESTAL MAX 075-150 MM (2.95-5.9 ")

DECK-DRY POLSKA SP. Z O.O.

Tensile Test Report

Customer Name:		Operator:	Test Date:	10/12/19 10:05
Material Name:	DDP-MAX-075-150	Test Standard:	Specifications	
Test2.000mm/min	2.000mm/min	Gauge Length:		

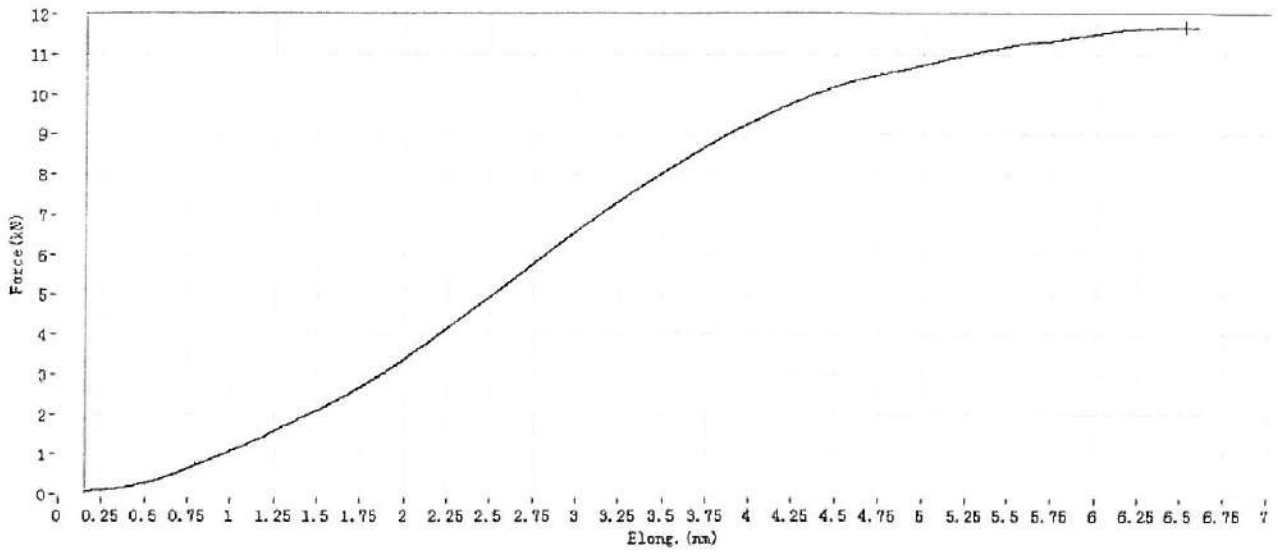

No.	Force @ Peak (kN)	Elong. @ Peak (mm)
1	12,63	6,89

DECK-DRY POLSKA SP. Z O.O.
ABRAHAMA 48
80-307 GDAŃSK
NIP: 584-11-83-361

Tab. 11.01.16 - Maximum compressive eccentric load ADJUSTABLE PEDESTAL MAX 150-350 MM (5.90-13.80 ")

DECK-DRY POLSKA SP. Z O.O.

Tensile Test Report

Customer Name:		Operator:	Test Date:	10/12/19 10:05
Material Name:	DDP-MAX-150-350	Test Standard:	Specifications	
Test2.000mm/min	2.000mm/min	Gauge Length:		

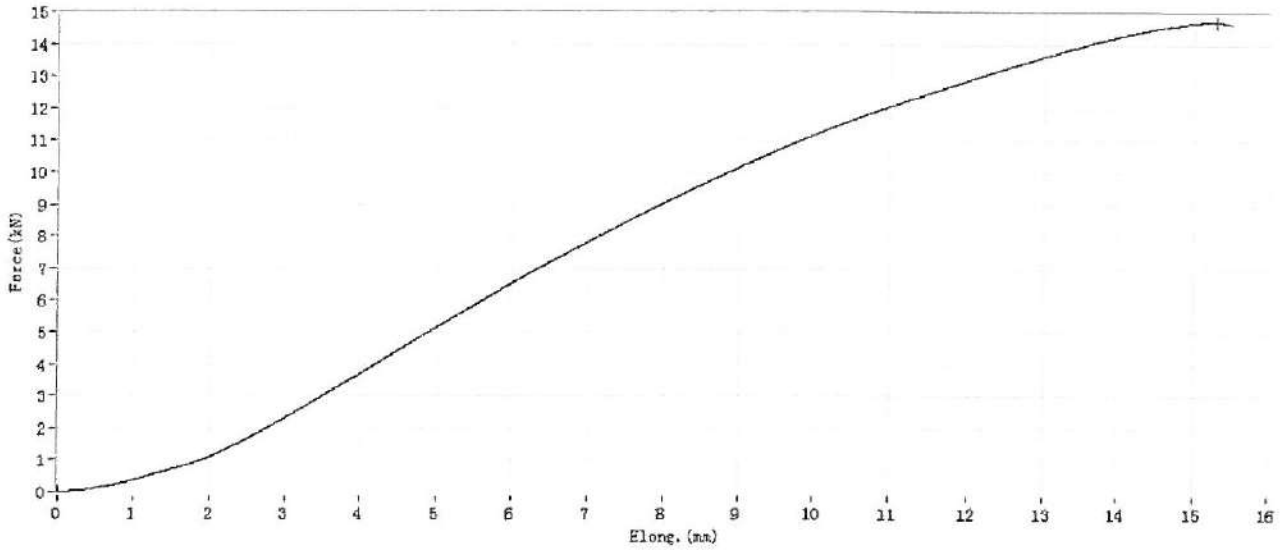

No.	Force @ Peak (kN)	Elong. @ Peak (mm)
1	15,886	9,683

DECK-DRY POLSKA SP. Z O.O.
ABRAHAMA 48
80-307 GDAŃSK
NIP: 584-11-83-361

Tab. 11.01.17 - Maximum compressive eccentric load ADJUSTABLE PEDESTAL max 150-350 MM (5.90-13.80 ") + 1* HEIGHT COUPLER DS200 MAX 200 MM (8 ") 350-550 MM (13.80-21.7 ")

DECK-DRY POLSKA SP. Z O.O.

Tensile Test Report

Customer Name:		Operator:	Test Date:	10/12/19 10:35
Material Name:	DDP-MAX-150-350+1*DS200	Test Standard:	Specifications	
Test2.000mm/min	2.000mm/min	Gauge Length:		

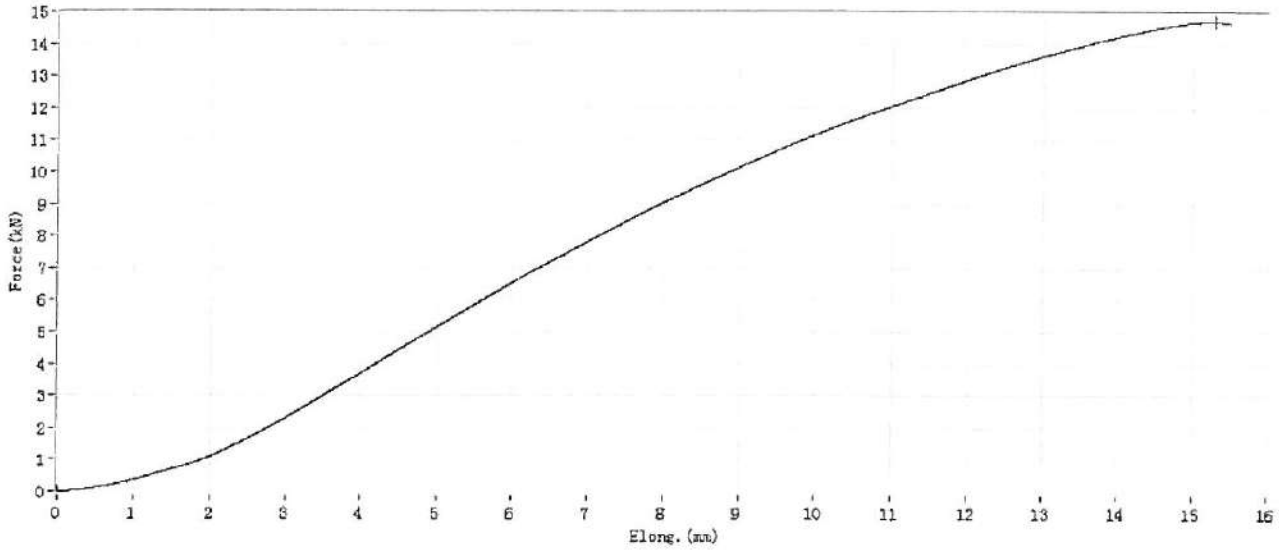

No.	Force @ Peak (kN)	Elong. @ Peak (mm)
1	15,616	11,708

DECK-DRY POLSKA SP. Z O.O.
ABRAHAMA 48
80-307 GDAŃSK
NIP: 584-11-83-361

Tab. 11.01.18 - Maximum compressive eccentric load ADJUSTABLE PEDESTAL max 150-350 MM (5.90-13.80 ") + 2* HEIGHT COUPLER DS200 MAX 200 MM (8 ") 550-750 MM (21.7-29.5 ")

DECK-DRY POLSKA SP. Z O.O.

Tensile Test Report

Customer Name:		Operator:	Test Date:	10/12/19 10:42
Material Name:	DDP-MAX-150-350+2*DS200	Test Standard:	Specifications	
Test2.000mm/min	2.000mm/min	Gauge Length:		

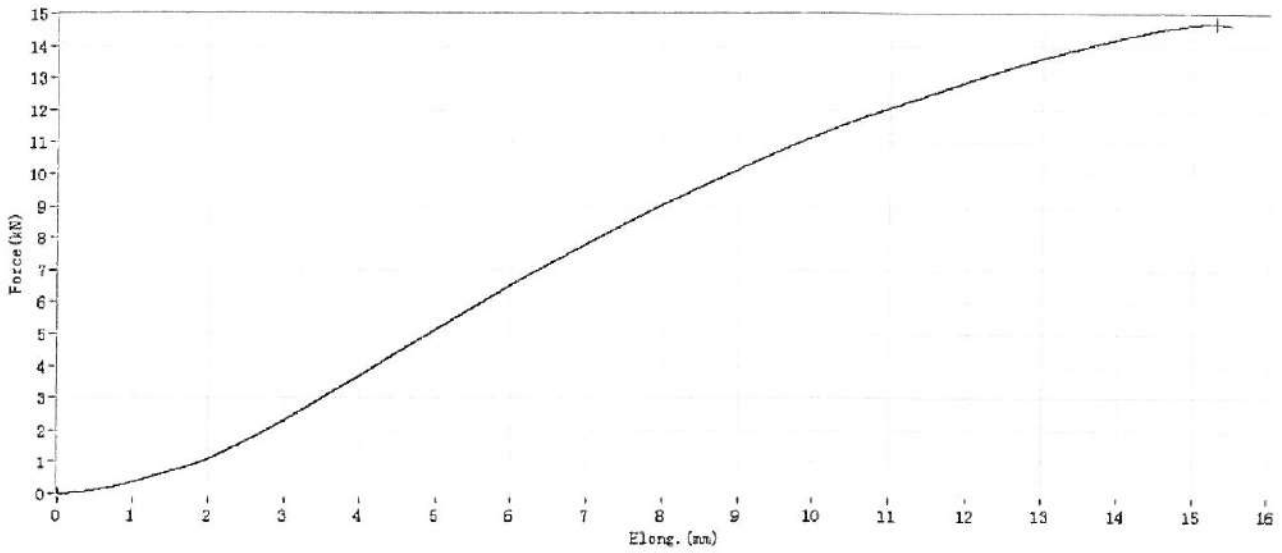

No.	Force @ Peak (kN)	Elong. @ Peak (mm)
1	15,799	13,682

DECK-DRY POLSKA SP. Z O.O.
ABRAHAMA 48
80-307 GDAŃSK
NIP: 584-11-83-361

Tab. 11.01.19 - Maximum compressive eccentric load ADJUSTABLE PEDESTAL max 150-350 MM (5.90-13.80 ") + 3* HEIGHT COUPLER DS200 MAX 200 MM (8 ") 750-950 MM (29.5-37.4 ")

DECK-DRY POLSKA SP. Z O.O.

Tensile Test Report

Customer Name:		Operator:	Test Date:	10/12/19 10:51
Material Name:	DDP-120-220+ 3xDS-100	Test Standard:	Specifications	
Test2.000mm/min	2.000mm/min	Gauge Length:		

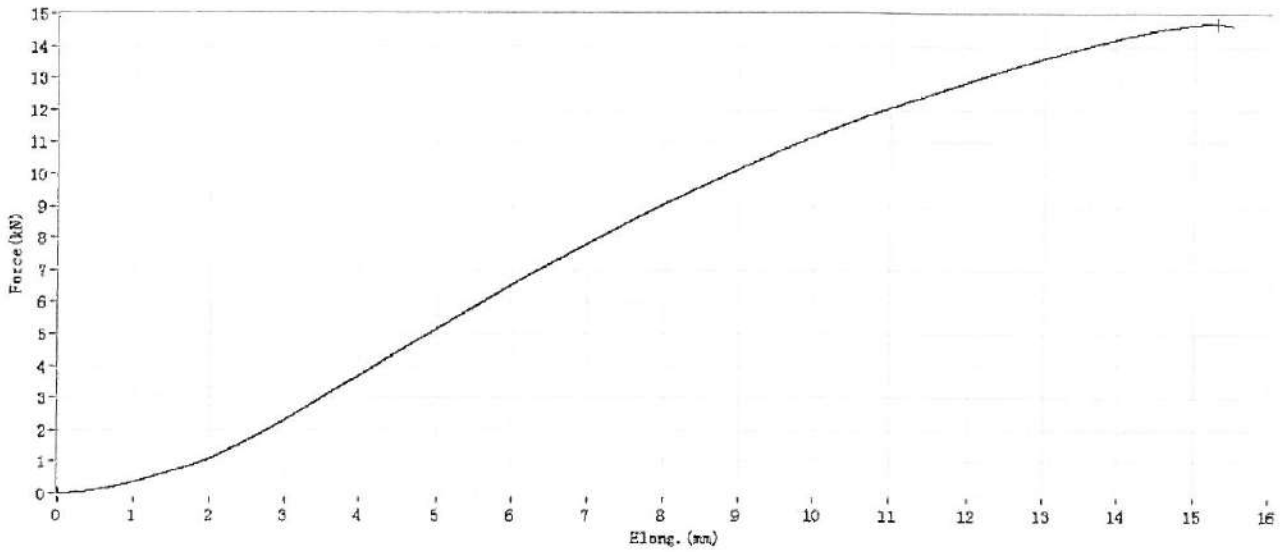

No.	Force @ Peak (kN)	Elong. @ Peak (mm)
1	16,75	14,512

DECK-DRY POLSKA SP. Z O.O.
ABRAHAMA 48
80-307 GDAŃSK
NIP: 584-11-83-361

11.02 Drawings

Draw. 11.02.1 - PAVER TILE SPACER 2MM (0.08 ") DIMENSIONS

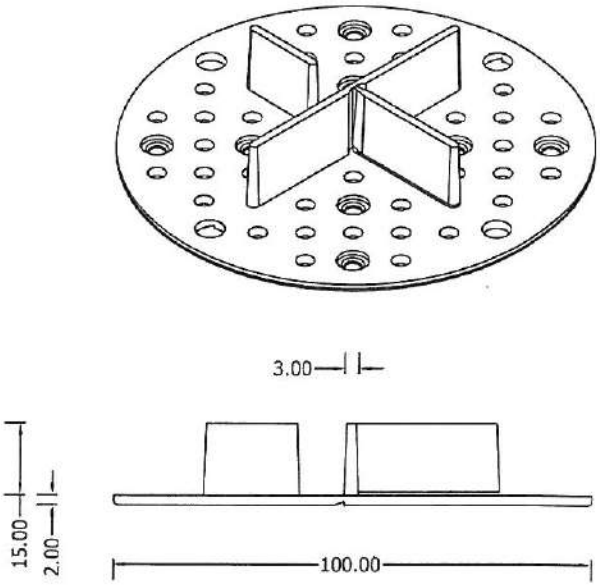

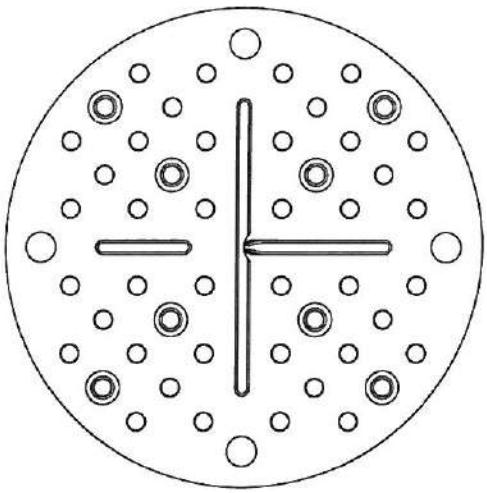

DECK-DRY POLSKA SP. Z O.O.
ABRAHAMA 48
80-307 GDAŃSK
NIP: 584-11-83-361

Draw. 11.02.2 - PAVER TILE SPACER 2MM (0.08 ") DISPLACEMENT VIEW WITH ACCESSORIES

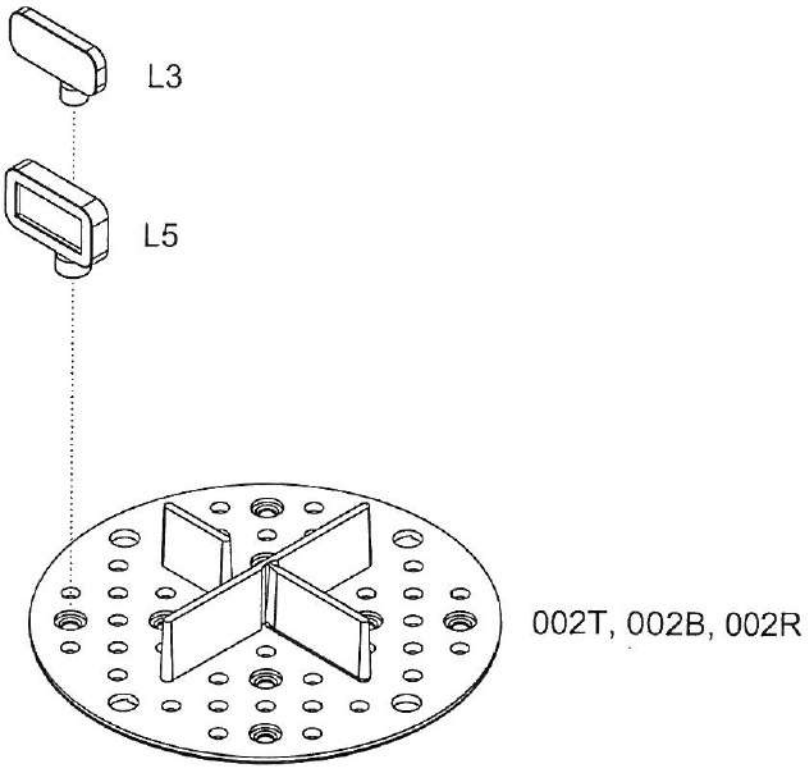

DECK-DRY POLSKA SP. Z O.O.
ABRAHAMA 48
80-307 GDAŃSK
NIP: 584-11-83-361

Draw. 11.02.3 - TILES SUPPORT PADS 8 MM (0.31 ") DIMENSIONS

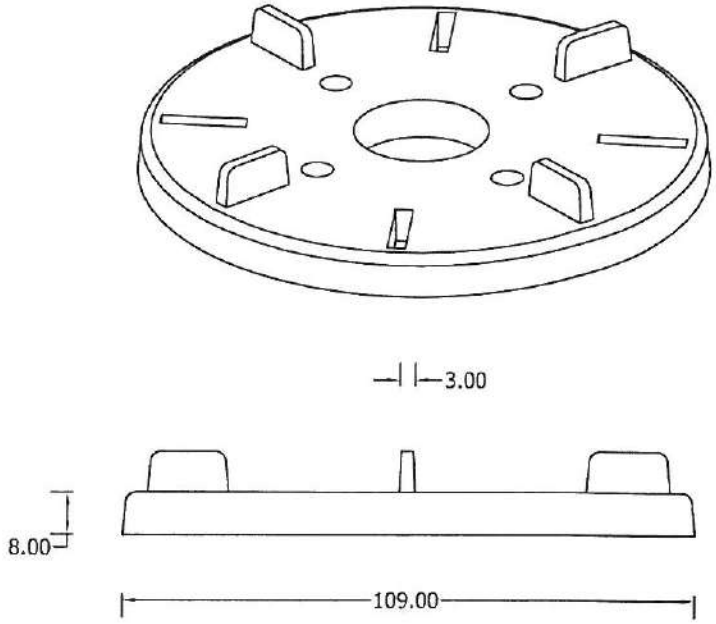

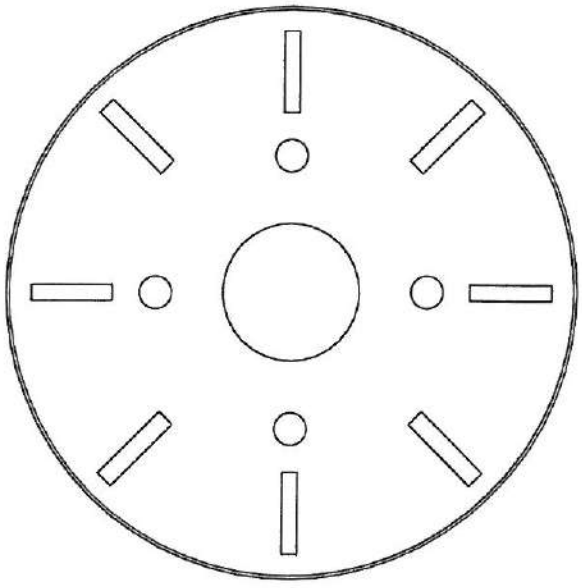

DECK-DRY POLSKA SP. Z O.O
ABRAHAMA 48
80-307 GDAŃSK
NIP: 584-11-83-361

Draw. 11.02.4 - TILES SUPPORT PADS 8 MM (0.31 ") DISPLACEMENT VIEW WITH ACCESSORIES

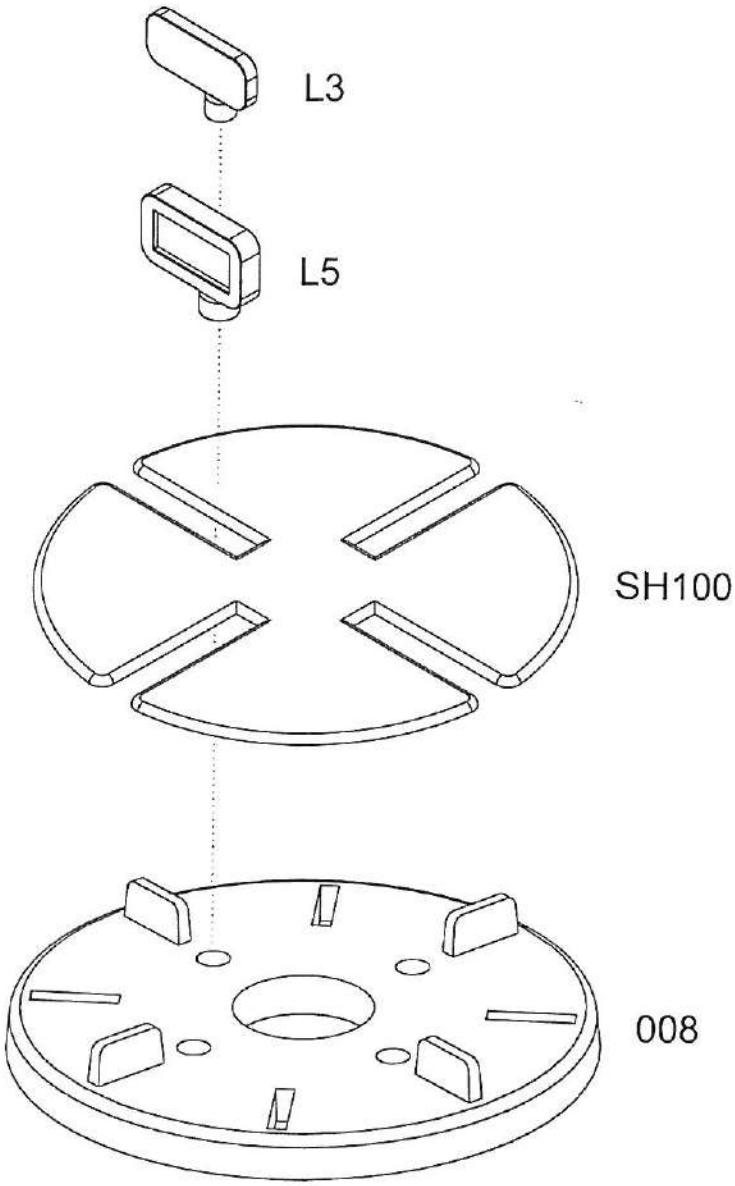

DECK-DRY POLSKA SP. Z O.O.
ABRAHAMA 48
80-307 GDAŃSK
NIP: 584-11-83-361

Draw. 11.02.5 - TILES SUPPORT PADS 10 MM (0,39 ") DIMENSIONS

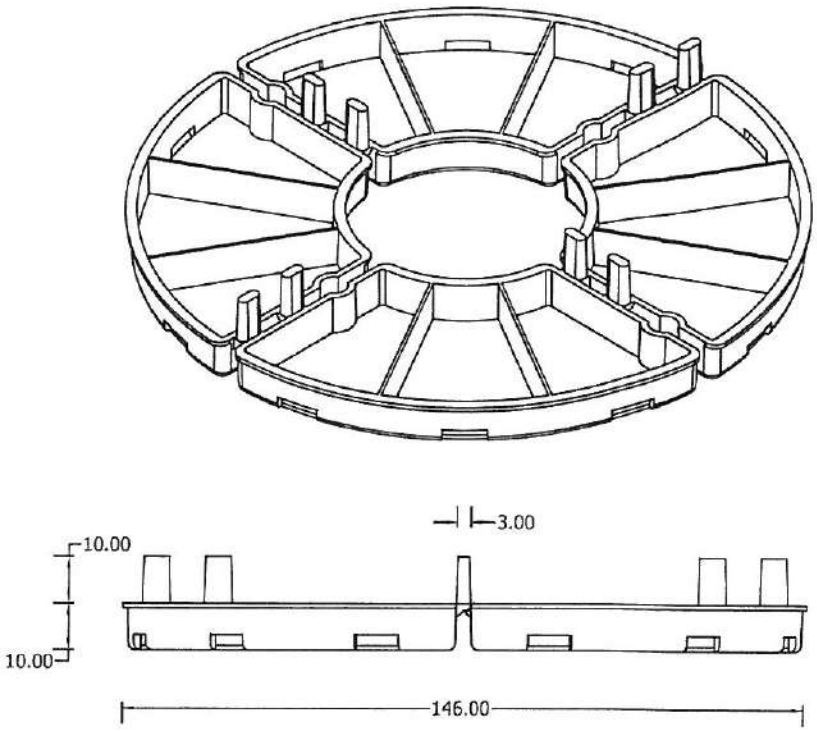

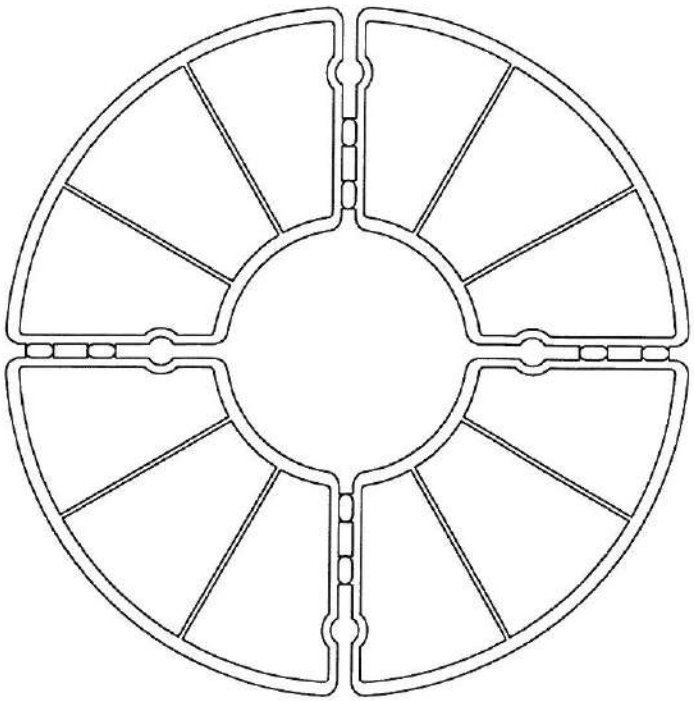

DECK-DRY POLSKA SP. Z O.O
ABRAHAMA 48
80-307 GDAŃSK
NIP: 584-11-83-361

Draw. 11.02.6 - TILES SUPPORT PADS 10 MM (0,39 ") DISPLACEMENT VIEW WITH ACCESSORIES

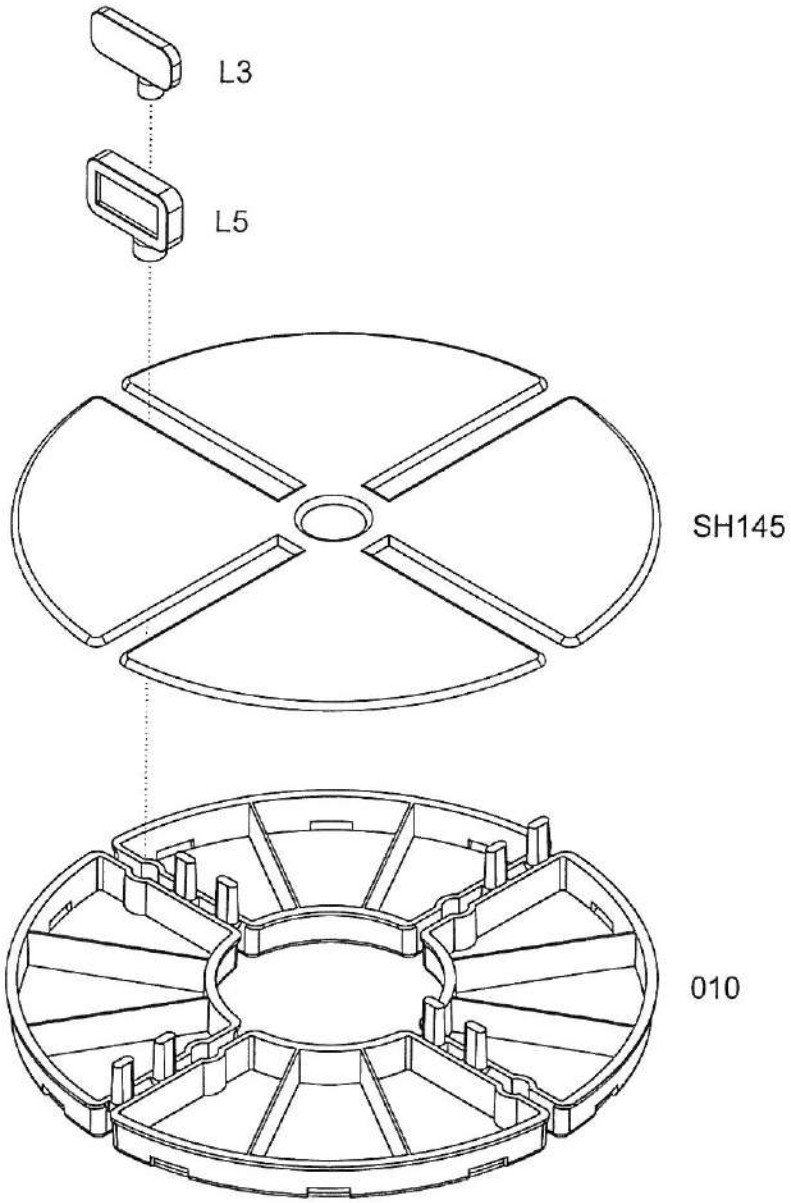

DECK-DRY POLSKA SP Z O.O.
ABRAHAMA 48
80-307 GDAŃSK
NIP: 584-11-83-361

Draw. 11.02.7 - TILES SUPPORT PADS 15 MM (0.59 ") DIMENSIONS

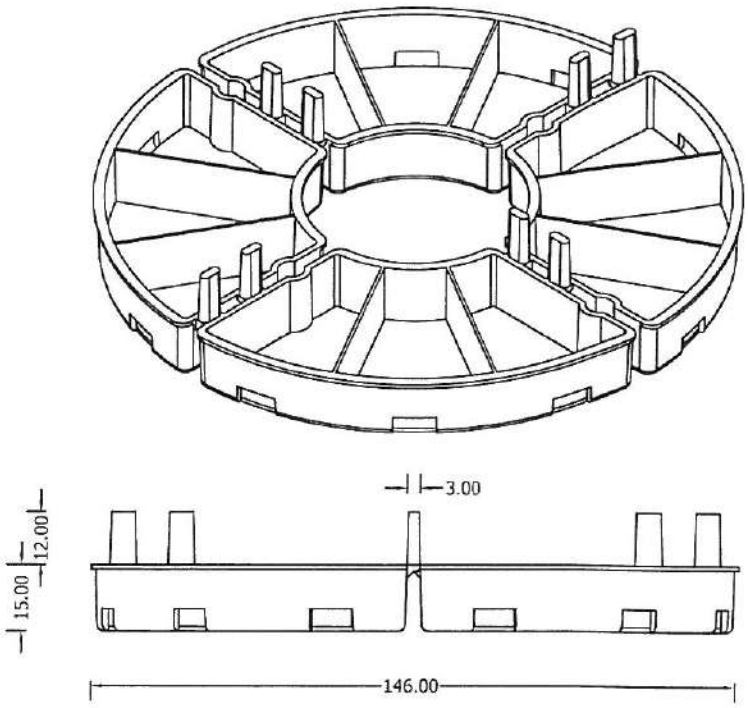

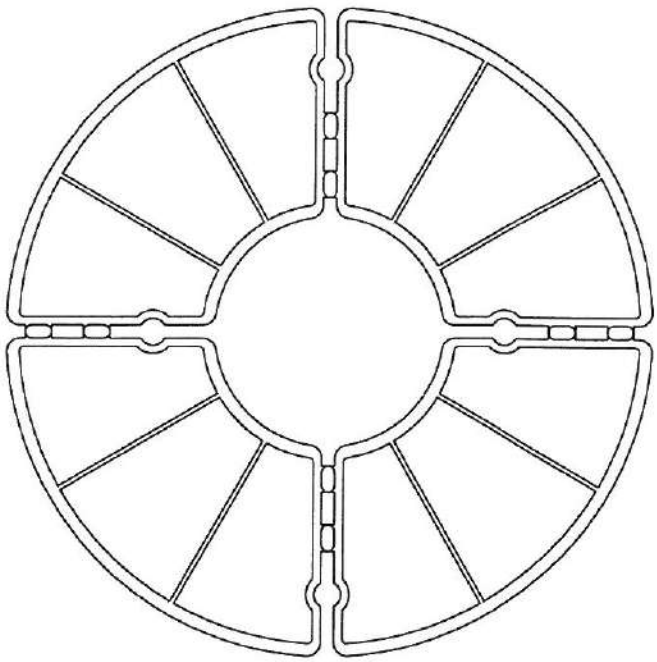

DECK-DRY POLSKA SP. Z O.O.
ABRAHAMA 48
80-307 GDAŃSK
NIP: 584-11-83-361

Draw. 11.02.8 - TILES SUPPORT PADS 15 MM (0.59 ") DISPLACEMENT VIEW WITH ACCESSORIES

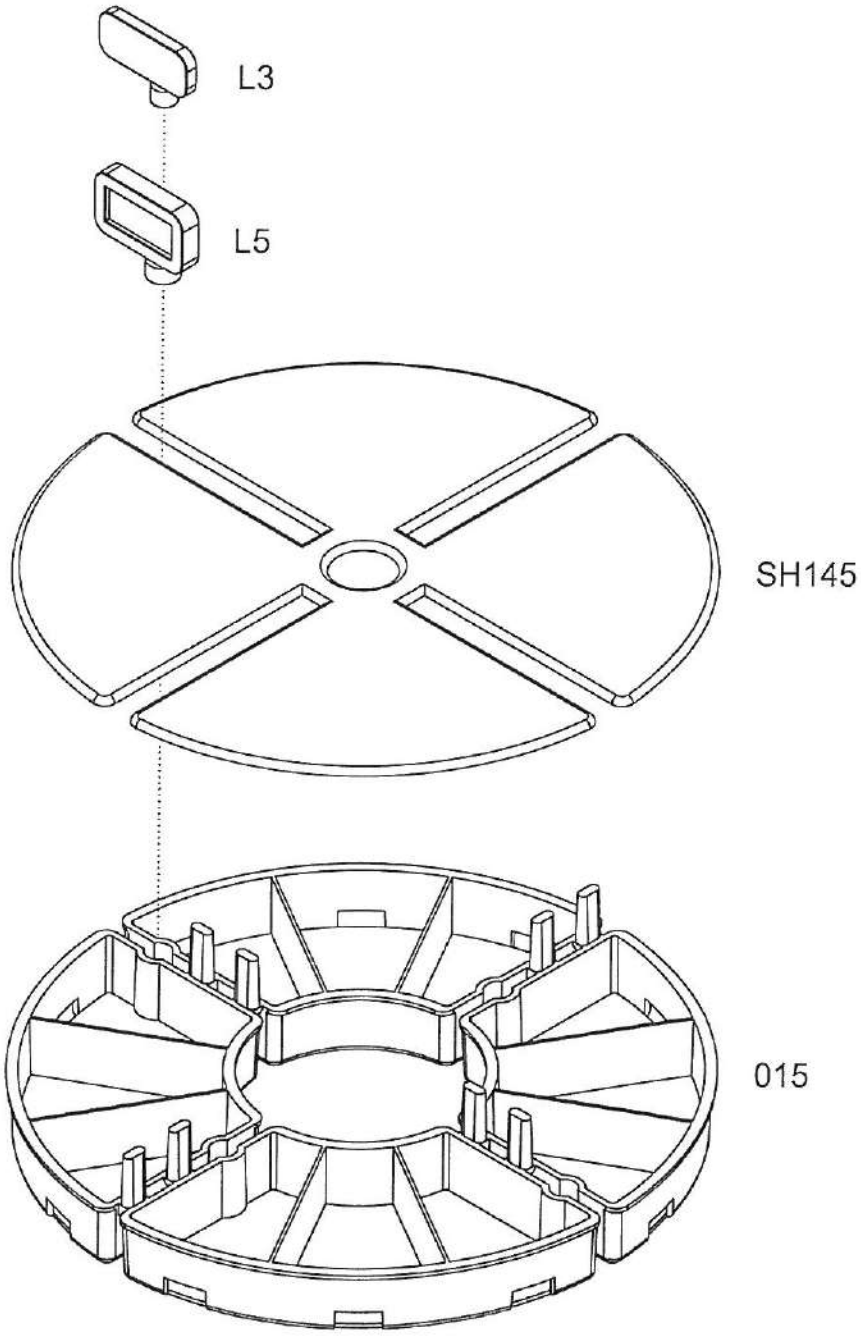

DECK-DRY POLSKA SP. Z O.O.
ABRAHAMA 48
80-307 GDAŃSK
NIP: 584-11-83-361

Draw. 11.02.9 - TILES SUPPORT PADS 16 MM (0.63 ") DIMENSIONS

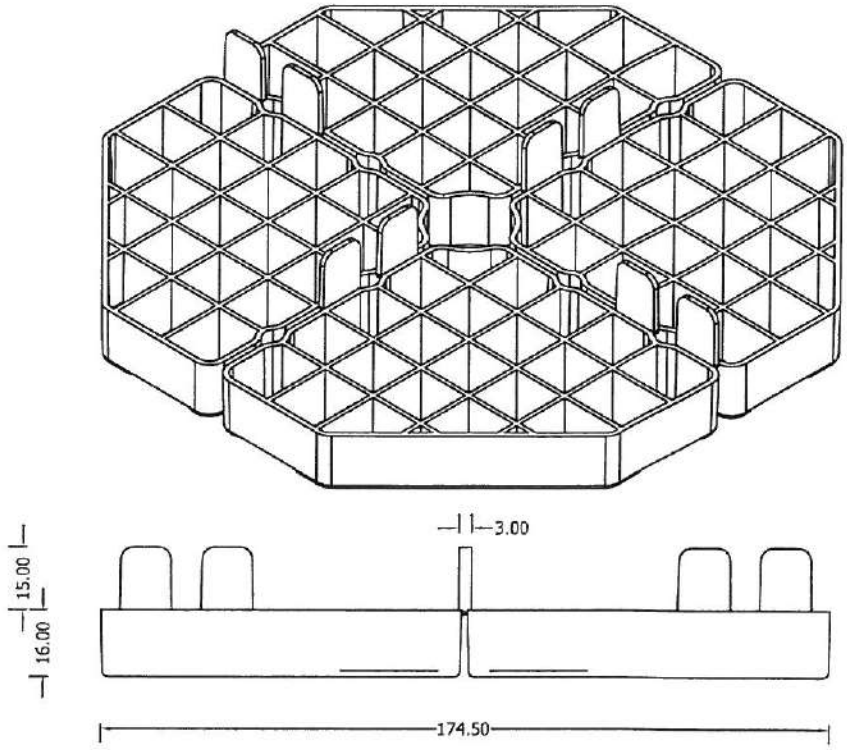

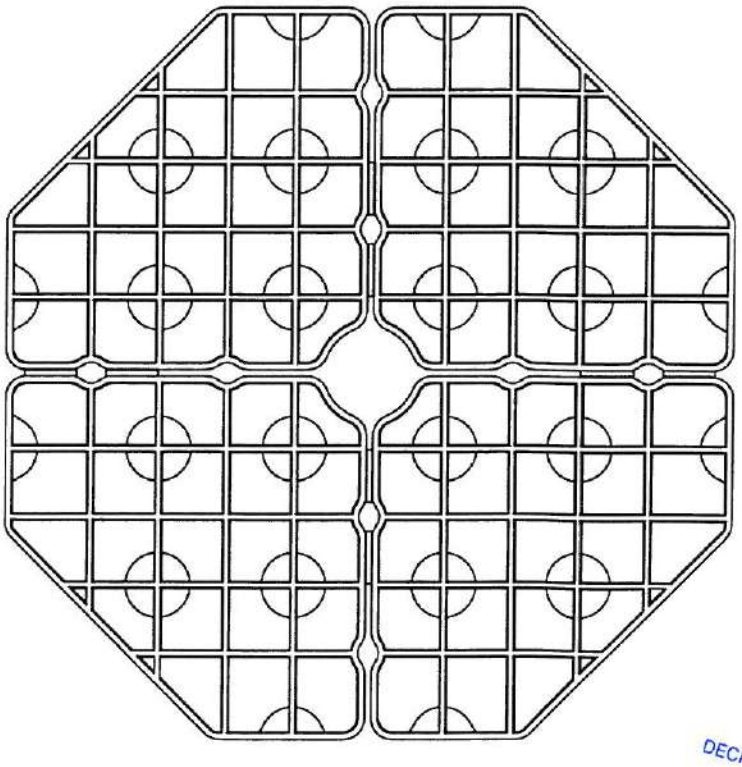

DECK-DRY POLSKA SP. Z O.O.
ABRAHAMA 48
80-307 GDAŃSK
NIP: 584-11-83-361

Draw. 11.02.10 - TILES SUPPORT PADS 16 MM (0.63 ") DISPLACEMENT VIEW WITH ACCESSORIES

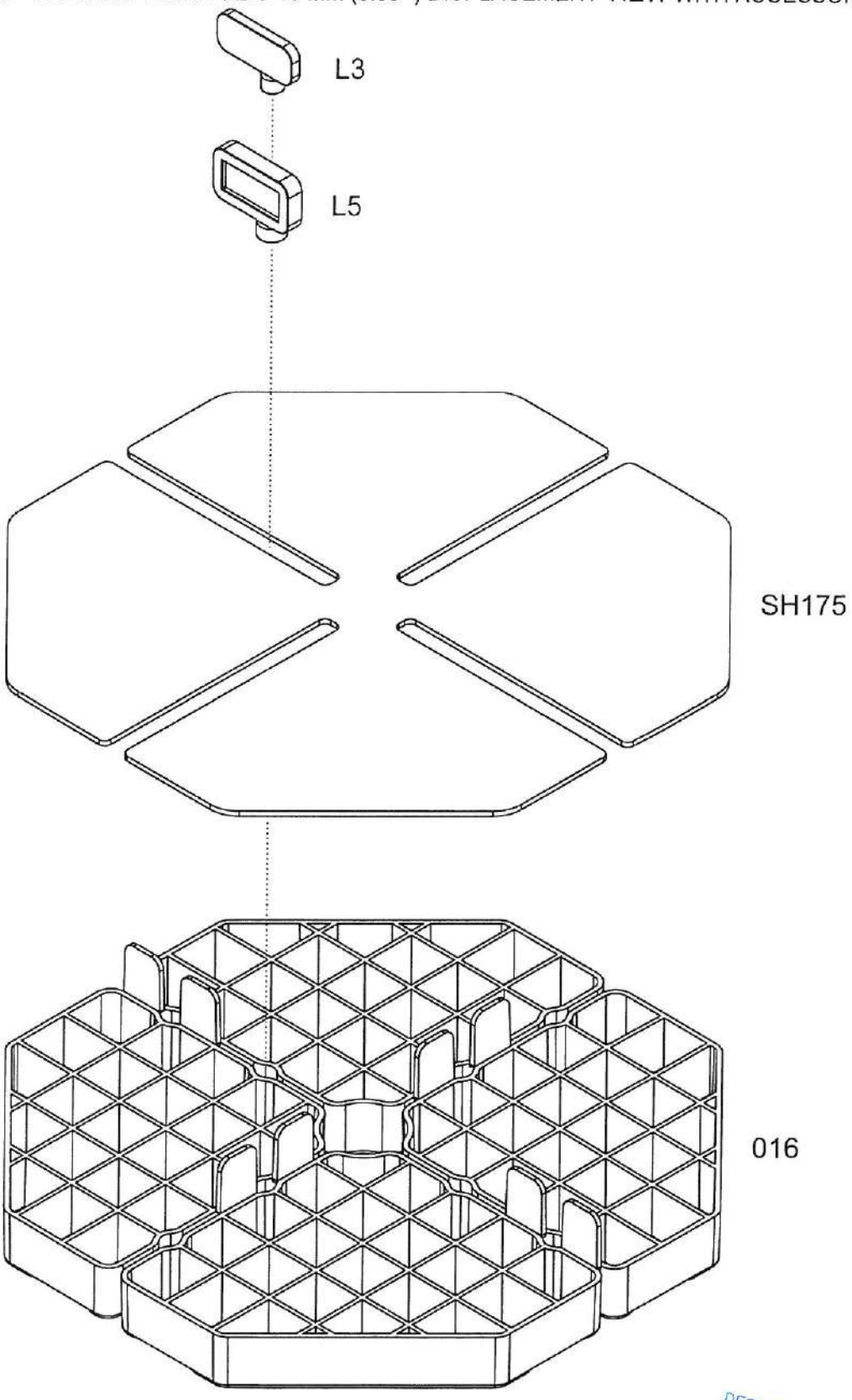

DECK-DRY POLSKA SP. Z O.O.
ABRAHAMA 48
80-307 GDAŃSK
NIP: 584-11-83-361

Draw. 11.02.11 - ADJUSTABLE PEDESTAL SPIRAL 10-17 MM (0.39"-0.67") DIMENSIONS

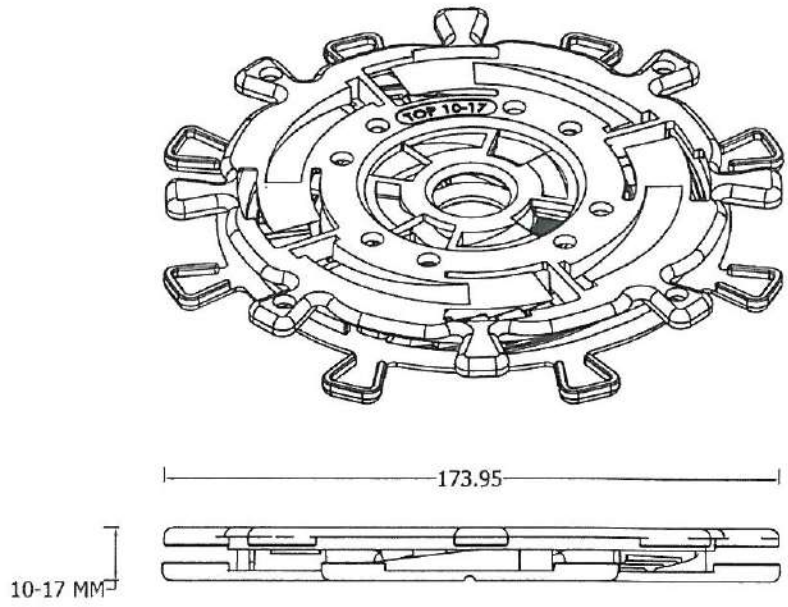

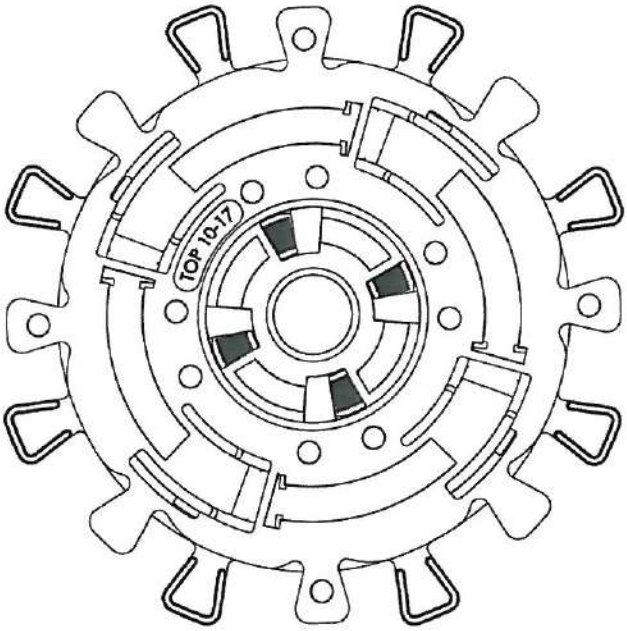

DECK-DRY POLSKA SP. Z O.O
ABRAHAMA 48
80-307 GDAŃSK
NIP: 584-11-83-361

Draw. 11.02.12 - ADJUSTABLE PEDESTAL SPIRAL 17-30 MM (0.67") DIMENSIONS

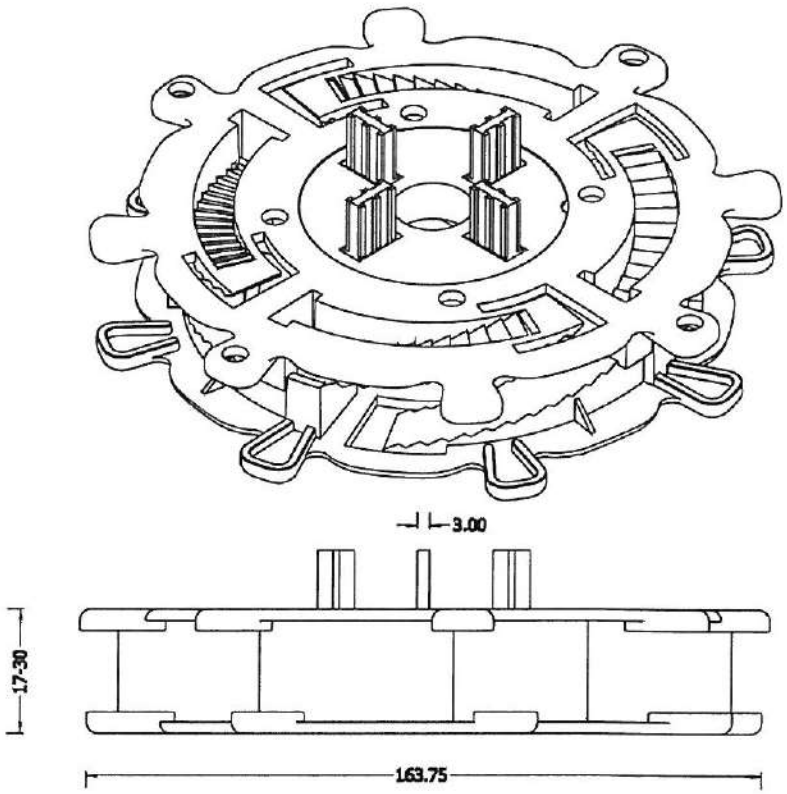

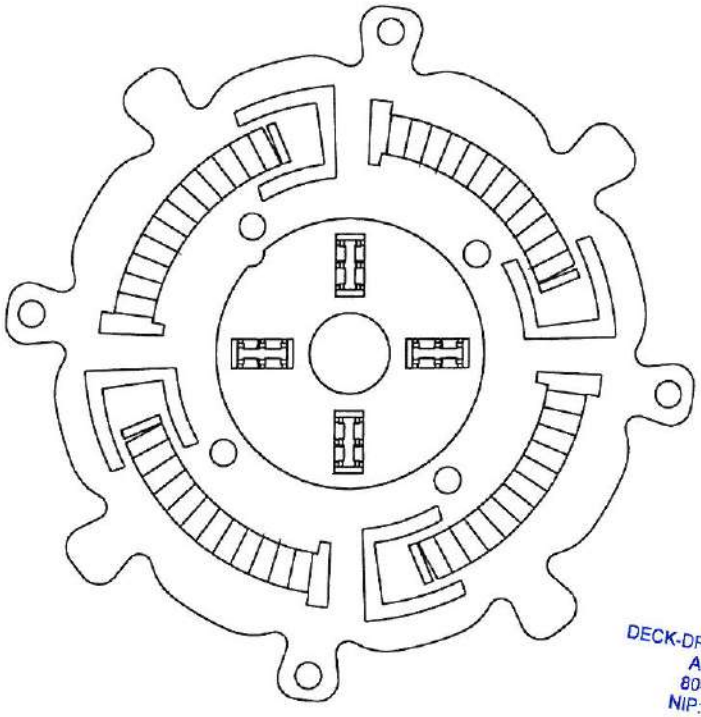

DECK-DRY POLSKA SP. Z O.O.
ABRAHAMA 48
80-307 GDAŃSK
NIP: 584-11-83-361

Draw. 11.02.13 - ADJUSTABLE PEDESTAL SPIRAL 17-30 MM (0.67") DISPLACEMENT VIEW WITH ACCESSORIES

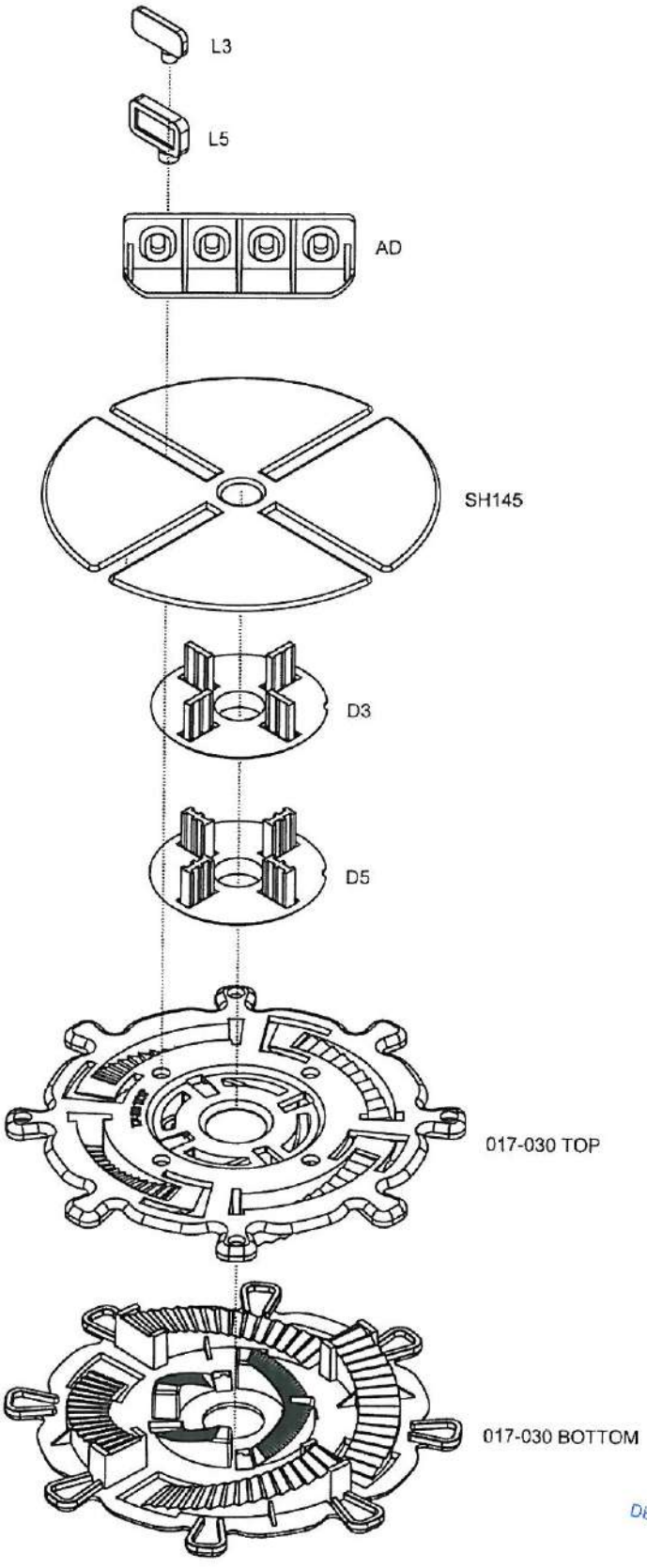

DECK DRY POLSKA SP. Z O.O.
ABRAHAMA 48
80-307 GDAŃSK
NIP: 584-11-83-361

Draw. 11.02.14 - ADJUSTABLE PEDESTAL SPIRAL 17-30 MM (0.67") DISPLACEMENT VIEW WITH ACCESSORIES

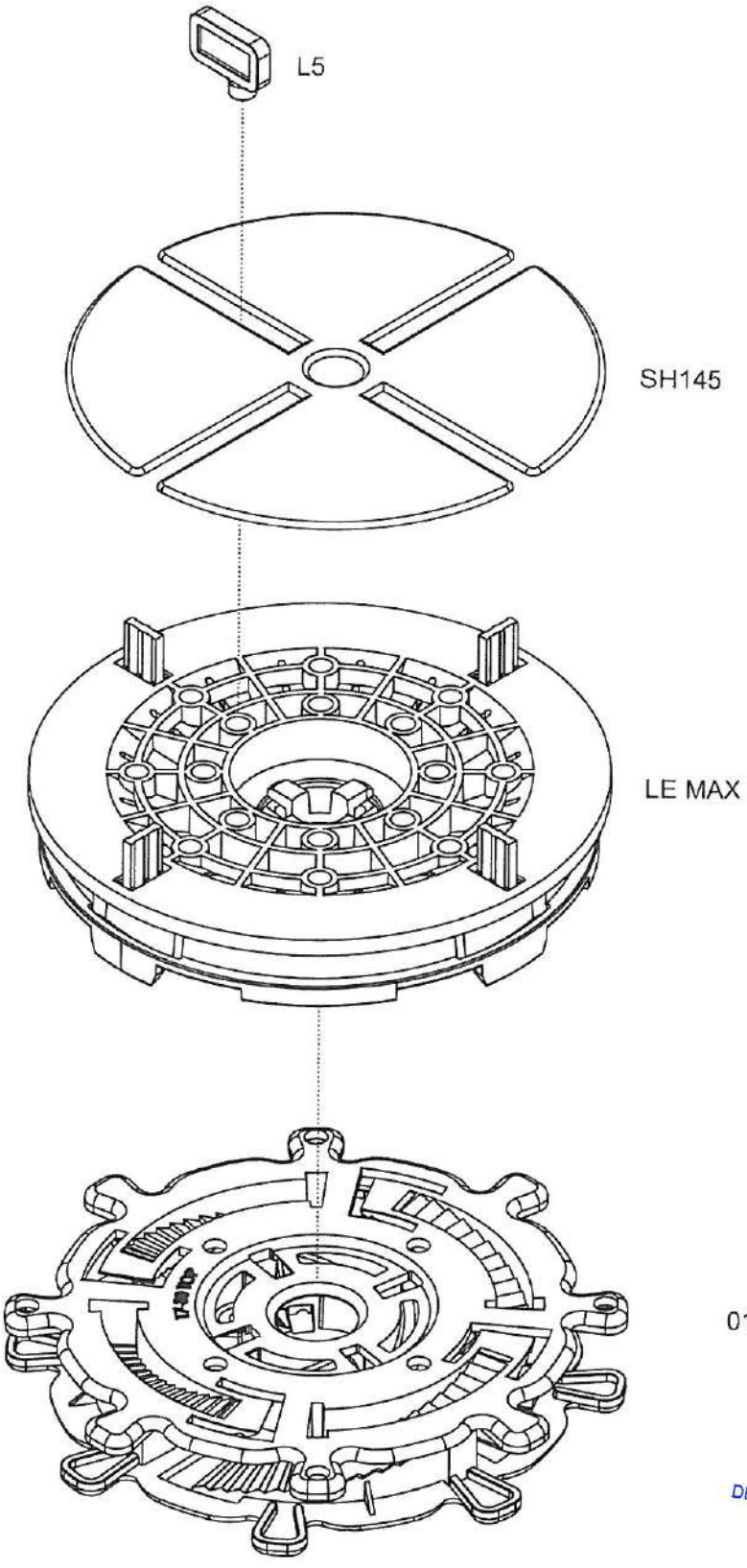

DECK-DRY POLSKA SP. Z O.O.
ABRAHAMA 48
80-307 GDAŃSK
NIP: 584-11-63-361

Draw. 11.02.15 - ADJUSTABLE PEDESTAL STANDARD 30-45 MM (1.2-1.75 ") DIMENSIONS

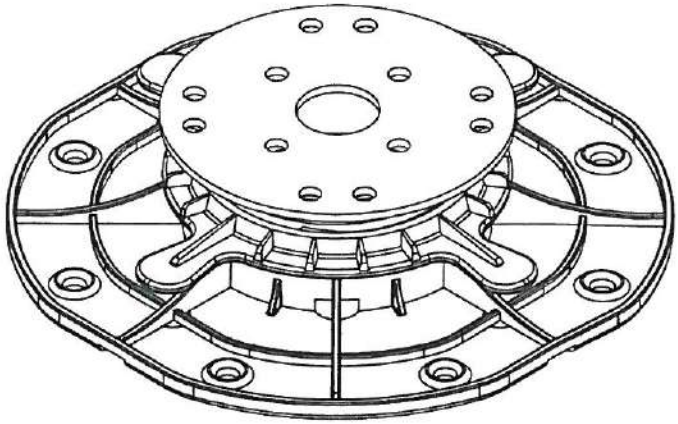

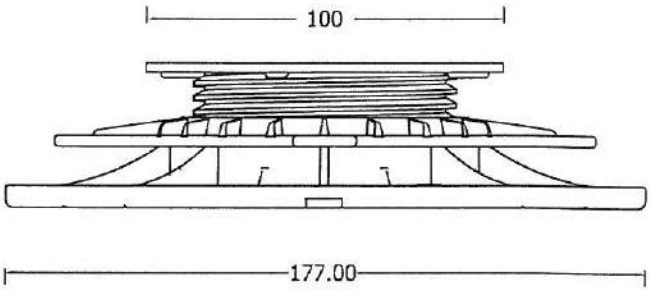

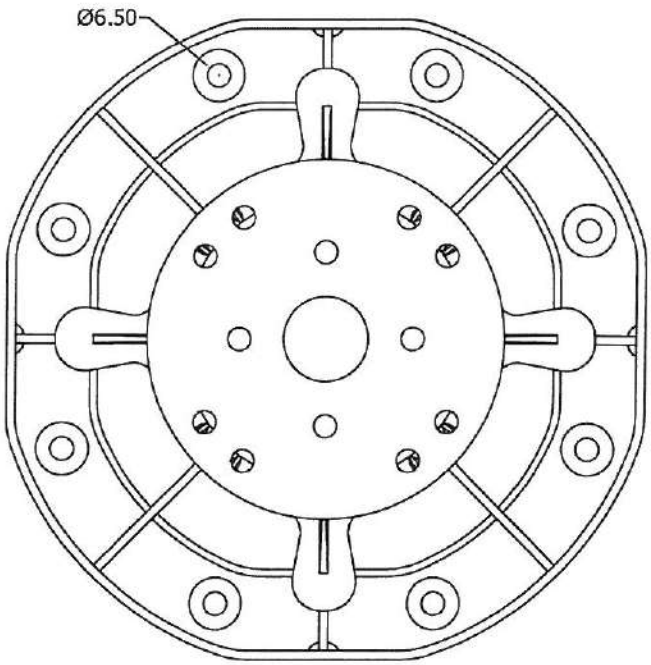

DECK-DRY POLSKA SP. Z O.O.
ABRAHAMA 48
80-307 GDAŃSK
NIP: 584-11-83-361

Draw. 11.02.16 - ADJUSTABLE PEDESTAL STANDARD 45-70 MM (1.75-2.75 ") DIMENSIONS

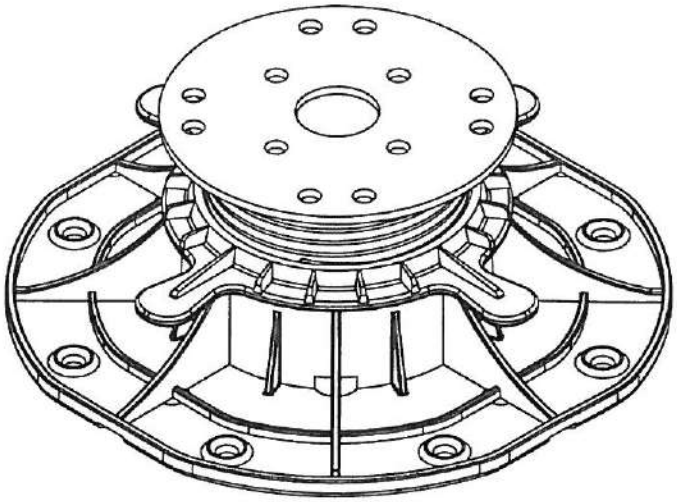

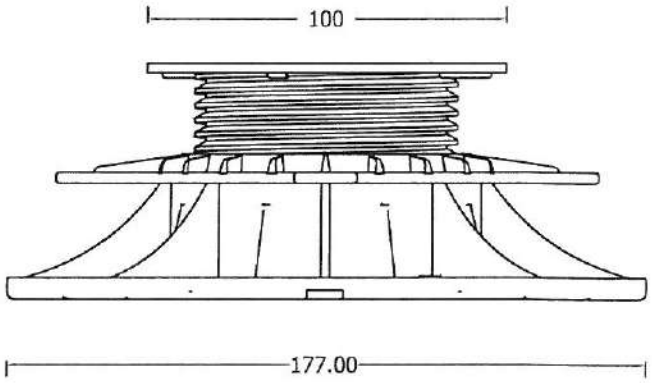

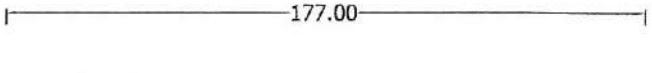

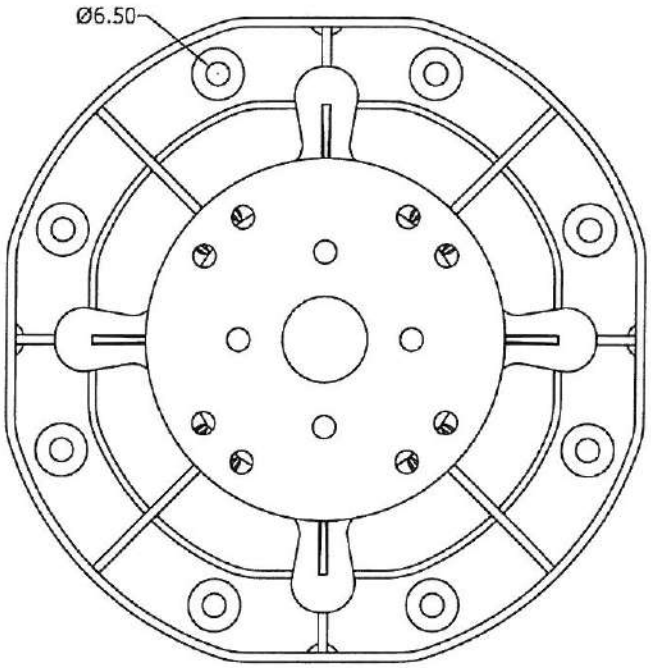

DECK-DRY POLSKA SP. Z O.O.
ABRAHAMA 48
80-307 GDAŃSK
NIP 584-11-83-361

Draw. 11.02.17 - ADJUSTABLE PEDESTAL STANDARD 70-120 MM (2.75-4.75 ") DIMENSIONS

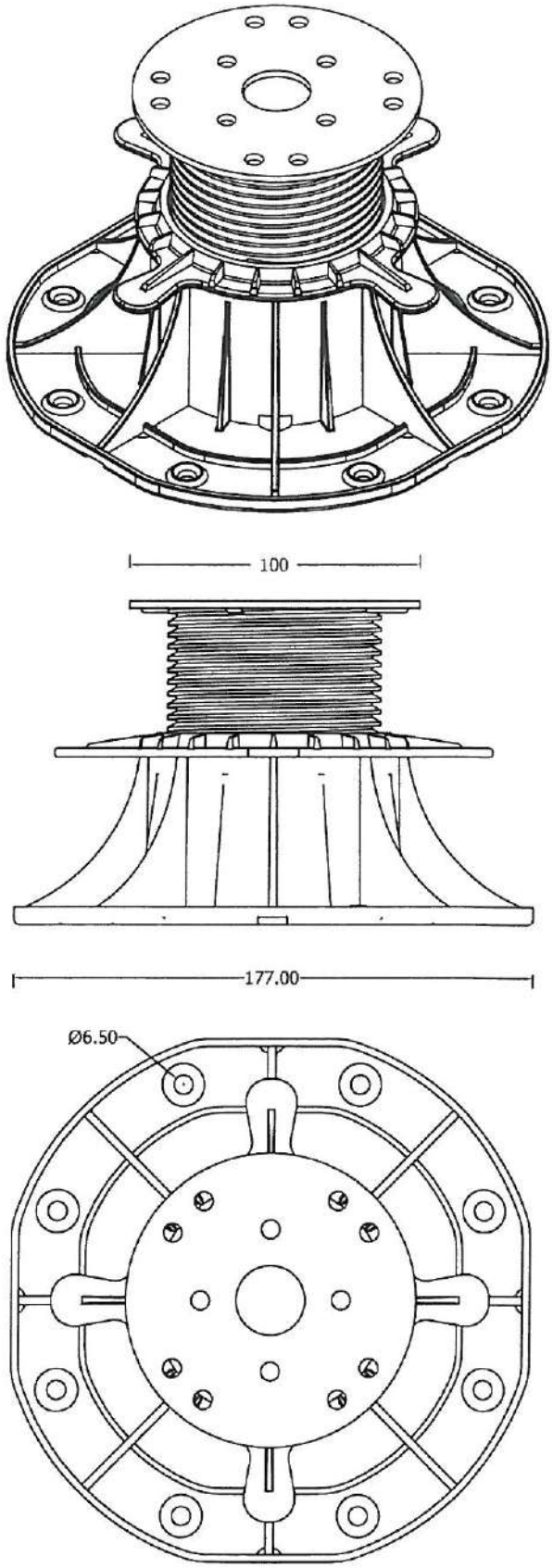

DECK-DRY POLSKA SP. Z O.O.
ABRAHAMA 48
80-307 GDAŃSK
NIP. 584-11-83-361

Draw. 11.02.18 - ADJUSTABLE PEDESTAL STANDARD 70-120 MM (2.75-4.75 ") DIMENSIONS

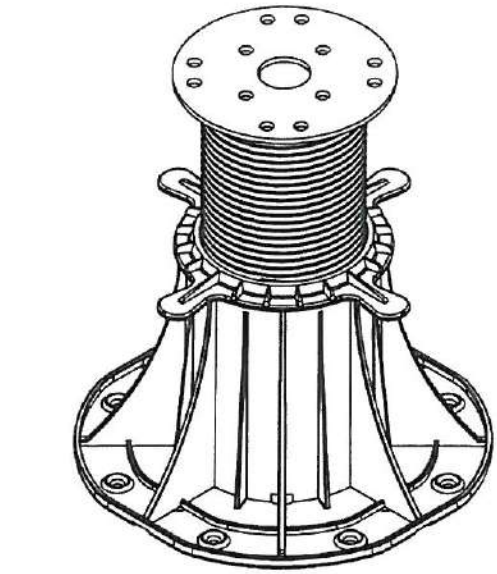

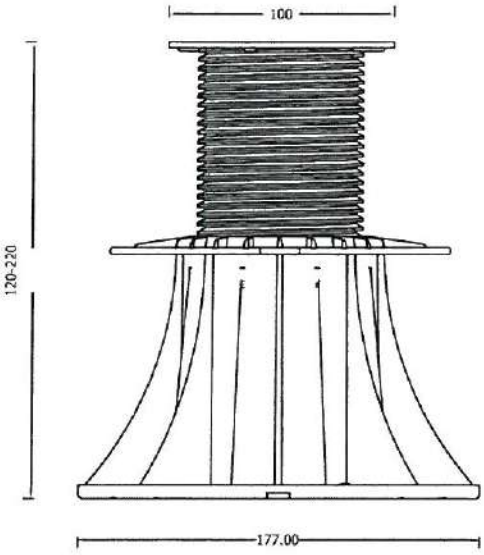

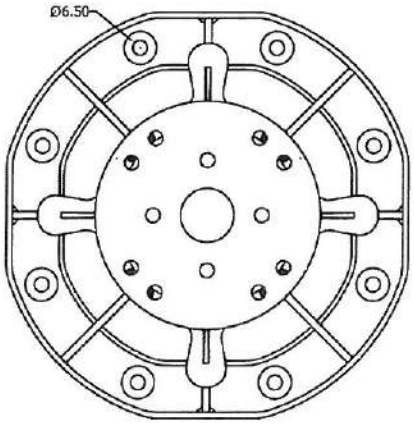

DECK-DRY POLSKA SP. Z O.O.
ABRAHAMA 48
80-307 GDAŃSK
NIP: 584-11-83-361

Draw. 11.02.19 - ADJUSTABLE PEDESTAL STANDARD DISPLACEMENT VIEW WITH ACCESSORIES

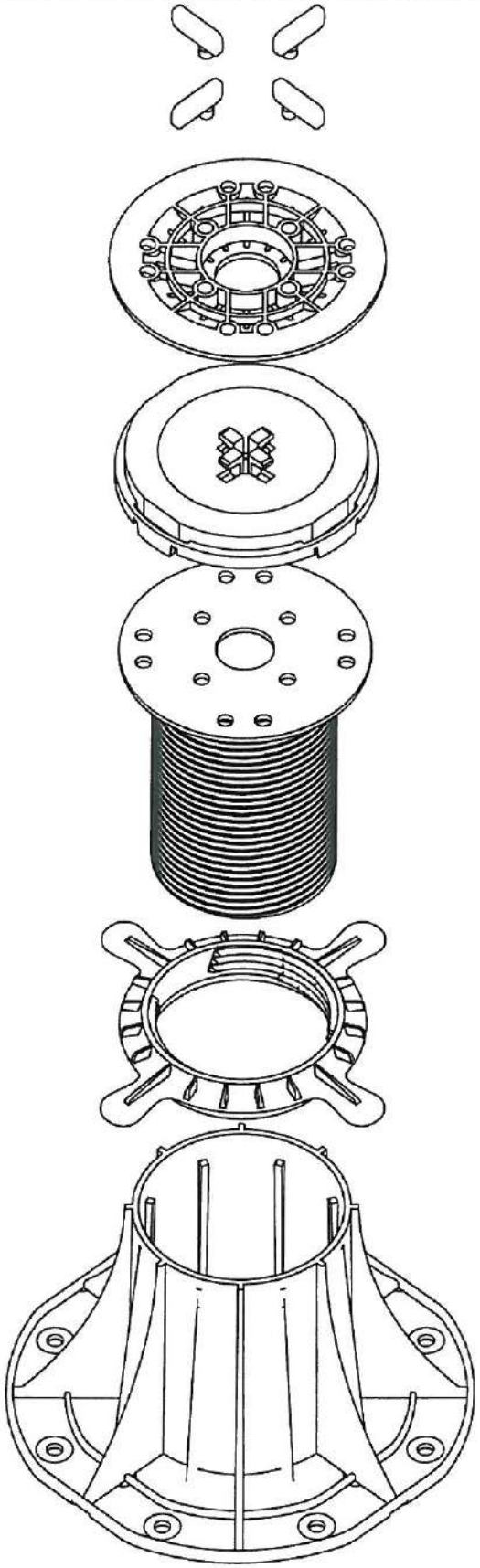

L3 / L5 / AD

STANDARD LE TOP

STANDARD LE BOTTOM

STANDARD S1, S2, S3, S4

STANDARD NN

STANDARD P1, P2, P3, P4

DECK-DRY POLSKA SP. Z O.O.
ABRAHAMA 48
80-30[illegible] GDAŃSK
NIP 5[illegible]33-361

Draw. 11.02.20 - ADJUSTABLE PEDESTAL MAX 45-75 MM (1.77-2.95 ") DIMENSIONS

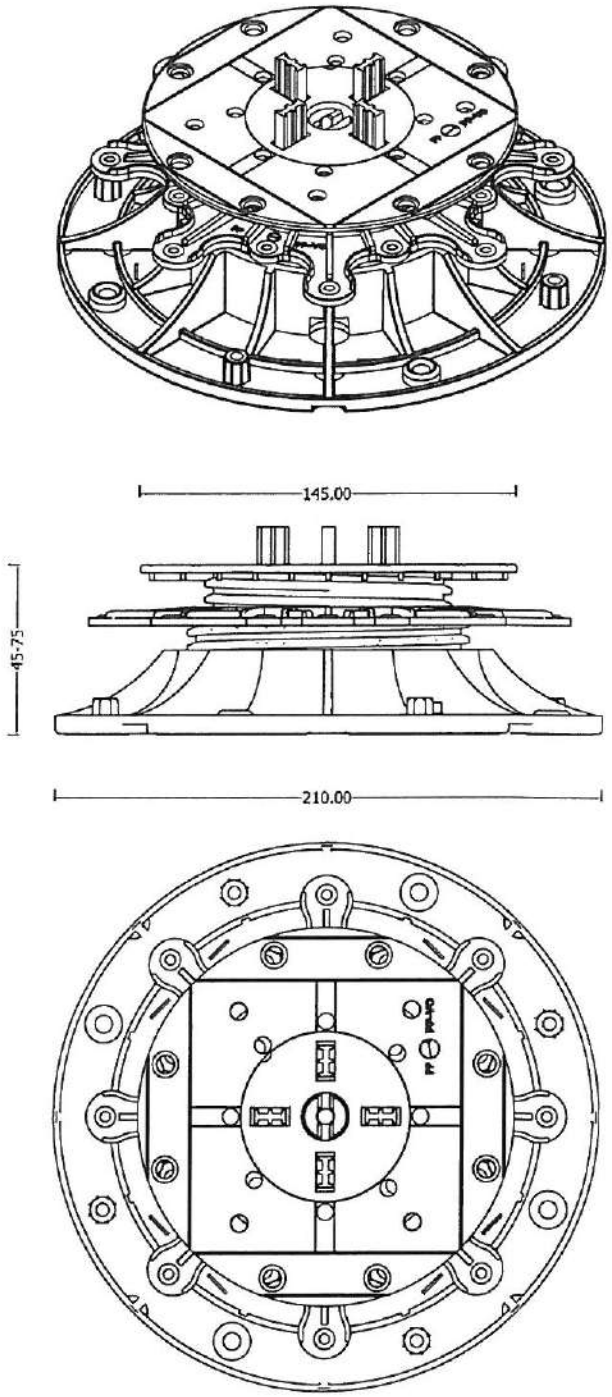

DECK-DRY POLSKA SP. Z O.O.
ABRAHAMA 48
80-307 GDAŃSK
NIP 584-11-93-361

Draw. 11.02.21 - ADJUSTABLE PEDESTAL MAX 75-150 MM (2.95-5.9 ") DIMENSIONS

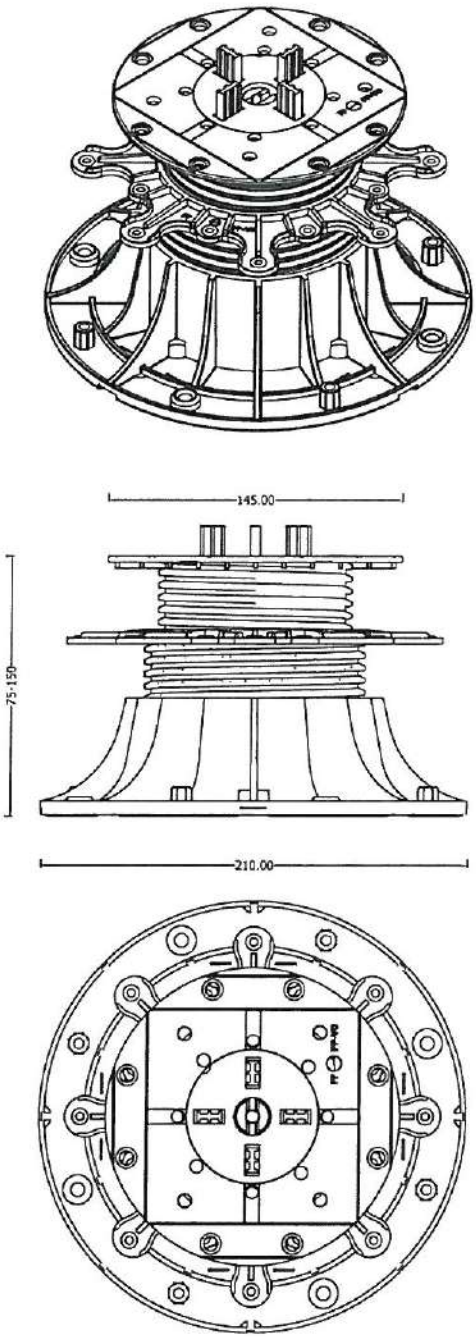

DECK-DRY POLSKA SP. Z O.O.
ABRAHAMA 48
80-307 GDAŃSK
NIP: 584-11-83-361

Draw. 11.02.22 - ADJUSTABLE PEDESTAL MAX 150-350 MM (5.90-13.80 ") DIMENSIONS

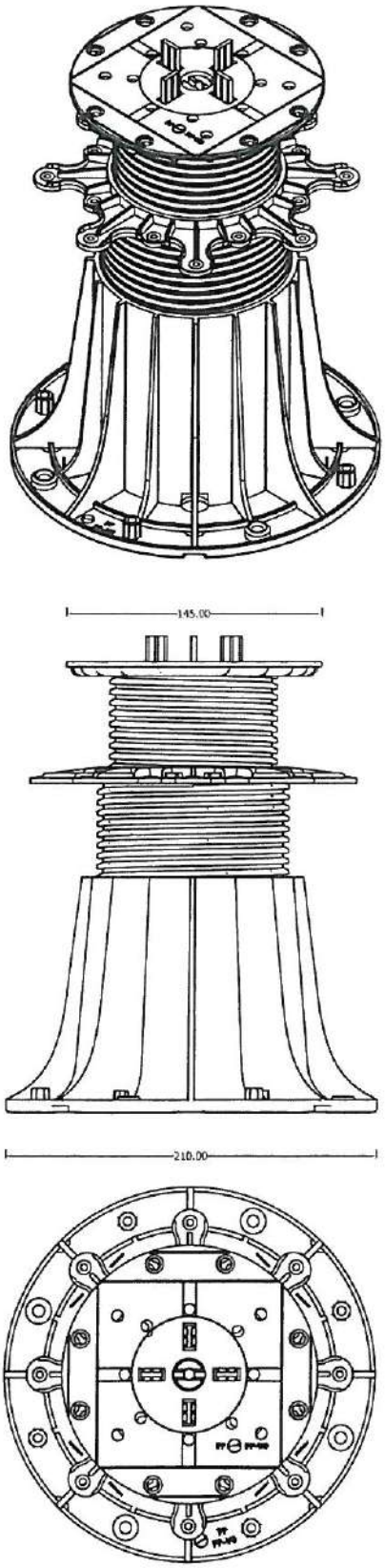

DECK-DRY POLSKA SP. Z O.O.
ABRAHAMA 48
80-307 GDAŃSK
NIP 584-11-83-361

DD GROUP

DD PEDESTALS
we support!

Draw. 11.02.23 - ADJUSTABLE PEDESTAL MAX 150-350 MM (5.90-13.80 ") + 1* HEIGHT COUPLER DS200 MAX 200 MM (8 ") 350-550 MM (13.80-21.7 ") DIMENSIONS

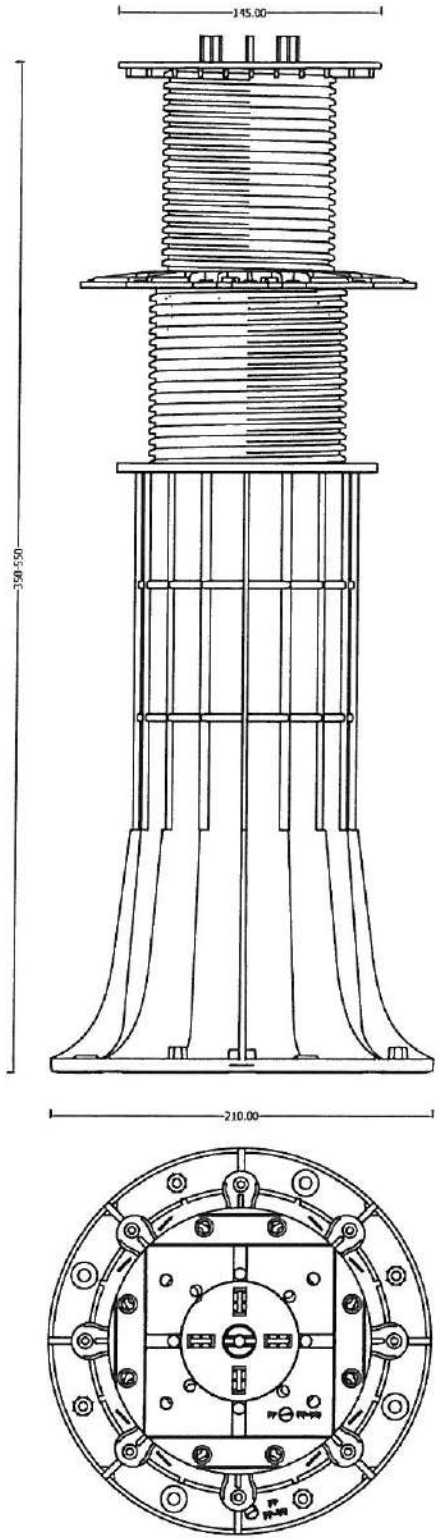

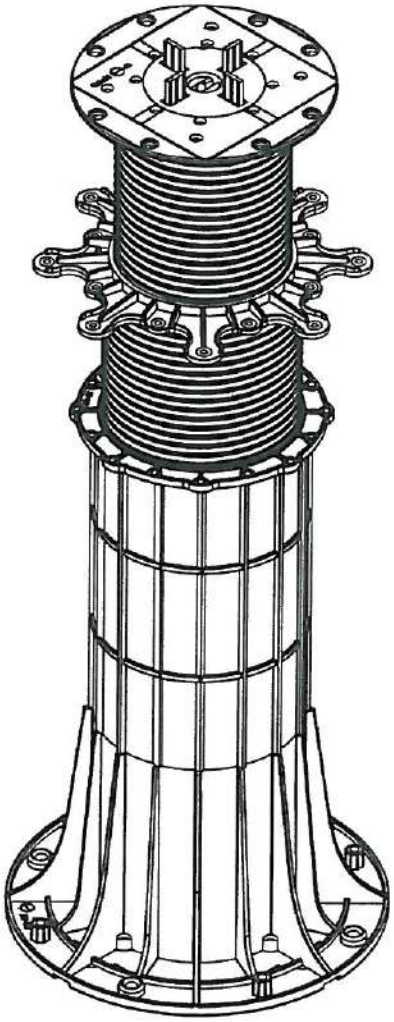

DECK-DRY POLSKA SP. Z O.O.
ABRAHAMA 48
80-307 GDAŃSK
NIP: 584-11-83-361

DD GROUP

DD PEDESTALS
we support!

Draw. 11.02.24 -PEDESTAL MAX 150-350 MM (5.90-13.80 ") + 2* HEIGHT COUPLER DS200 MAX 200 MM (8 ") 550-750 MM (21.7-29.5 ")

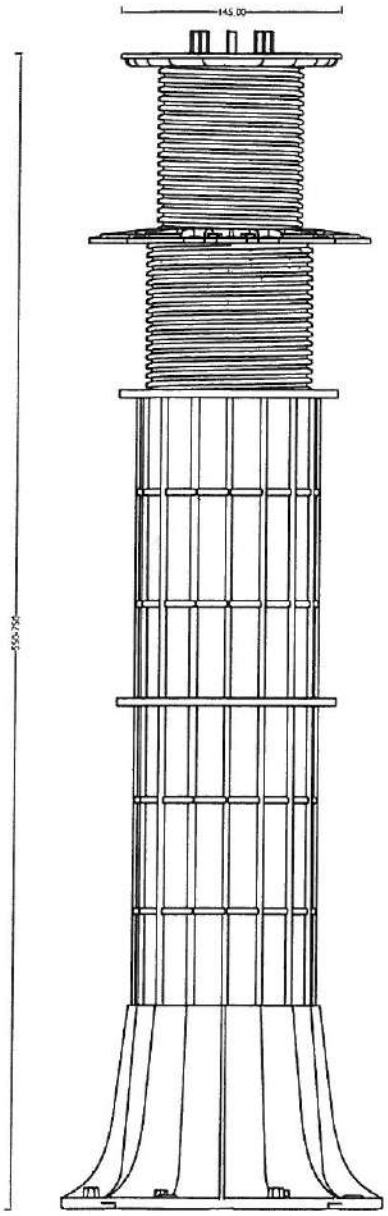

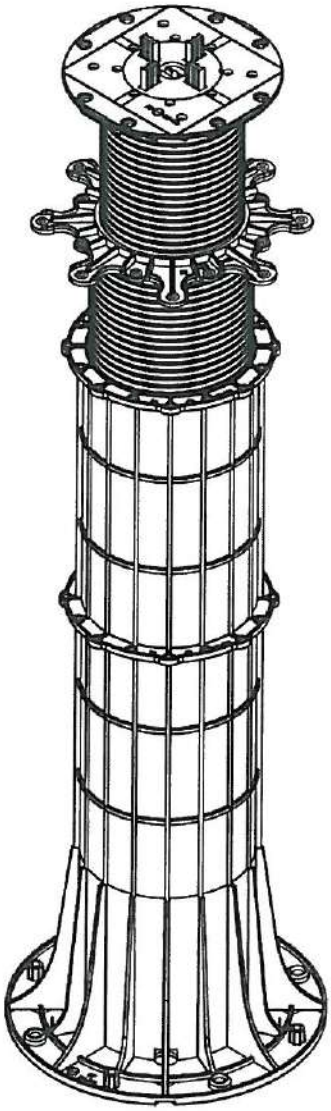

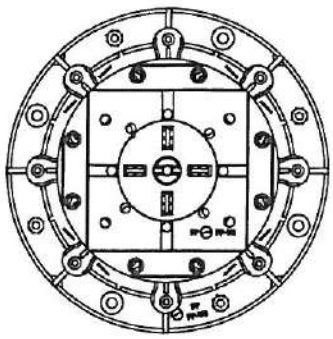

DECK-DRY POLSKA SP. Z O.O.
ABRAHAMA 48
80-307 GDAŃSK
NIP: 584-11-83-361

Draw. 11.02.25 - PEDESTAL MAX 150-350 MM (5.90-13.80 ") + 3* HEIGHT COUPLER DS200 MAX 200 MM (8 ") 750-950 MM (29.5-37.4 ")

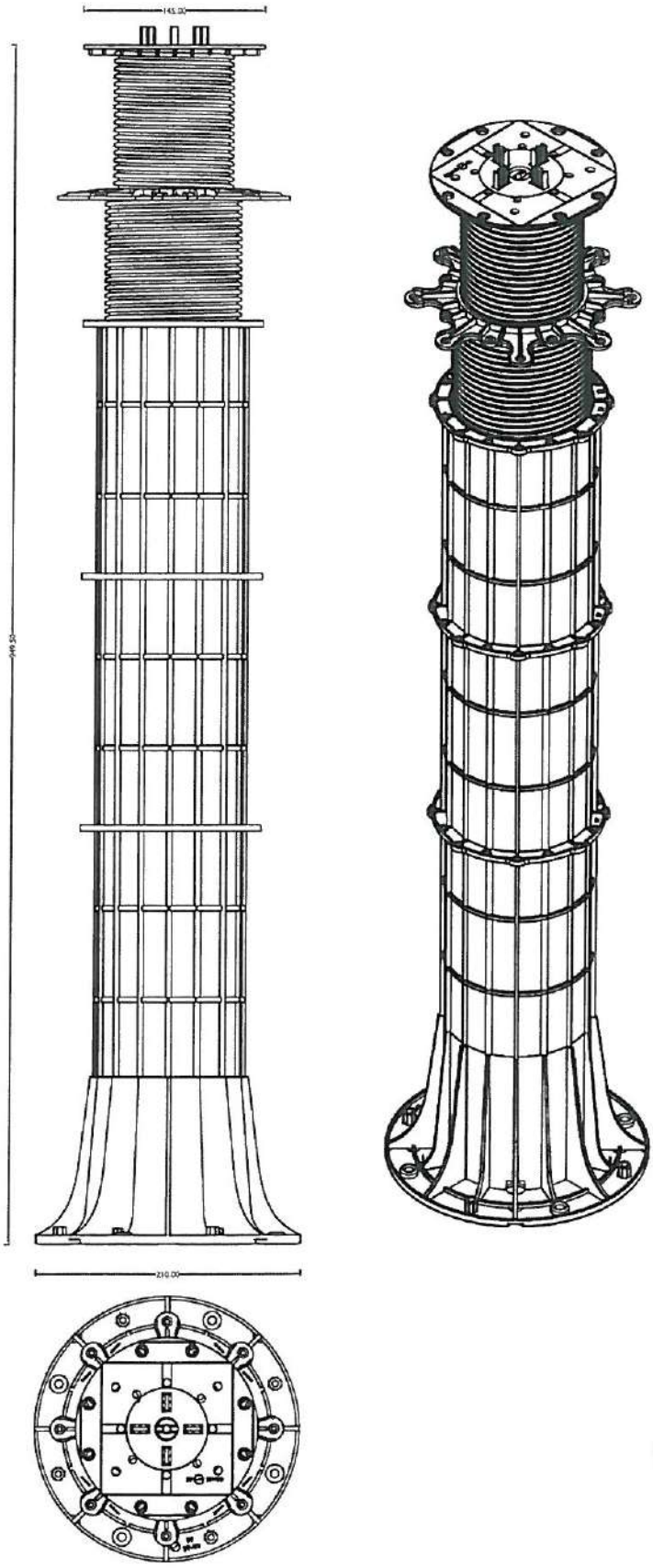

DECK-DRY POLSKA SP. Z O.O.
ABRAHAMA 48
80-307 GDAŃSK
NIP: 584-11-93-361

Draw. 11.02.27 - ADJUSTABLE PEDESTAL MAX 150-350 MM (5.90-13.80 ") DISPLACEMENT VIEW WITH ACCESSORIES

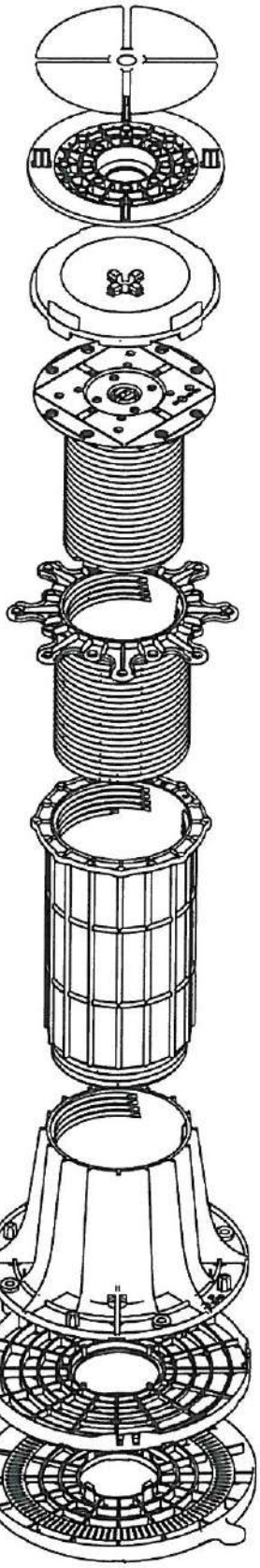

SH145

MAX LE TOP

MAX LE BOTTOM

MAX S3

MAX TN3

MAX DS200

MAX P3

MAX SC TOP

MAX SC BOTTOM

DECK-DRY POLSKA SP. Z O.O.
ABRAHAMA 48
80-307 GDAŃSK
NIP: 584-11-83-361

Draw. 11.02.28 - **HEIGHT COUPLER DS100 STANDARD DIMENSIONS**

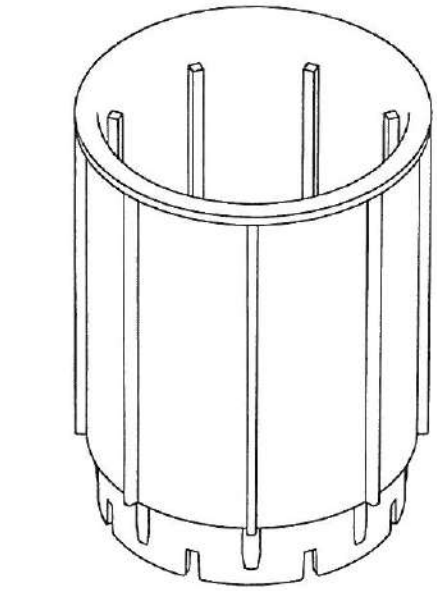

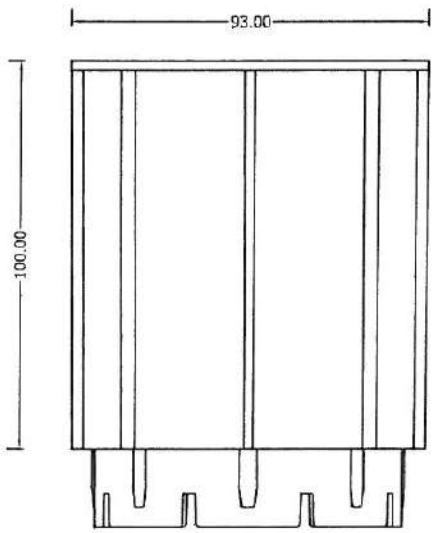

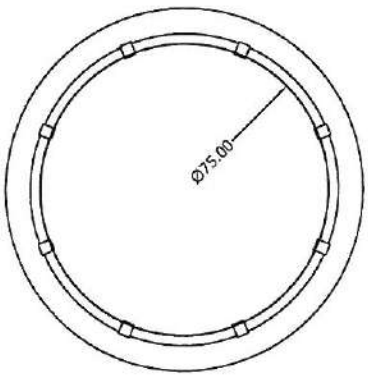

DECK-DRY POLSKA SP. Z O.O.
ABRAHAMA 48
80-307 GDAŃSK
NIP: 584-11-83-361

Draw. 11.02.29 - **HEIGHT COUPLER DS200 MAX DIMENSIONS**

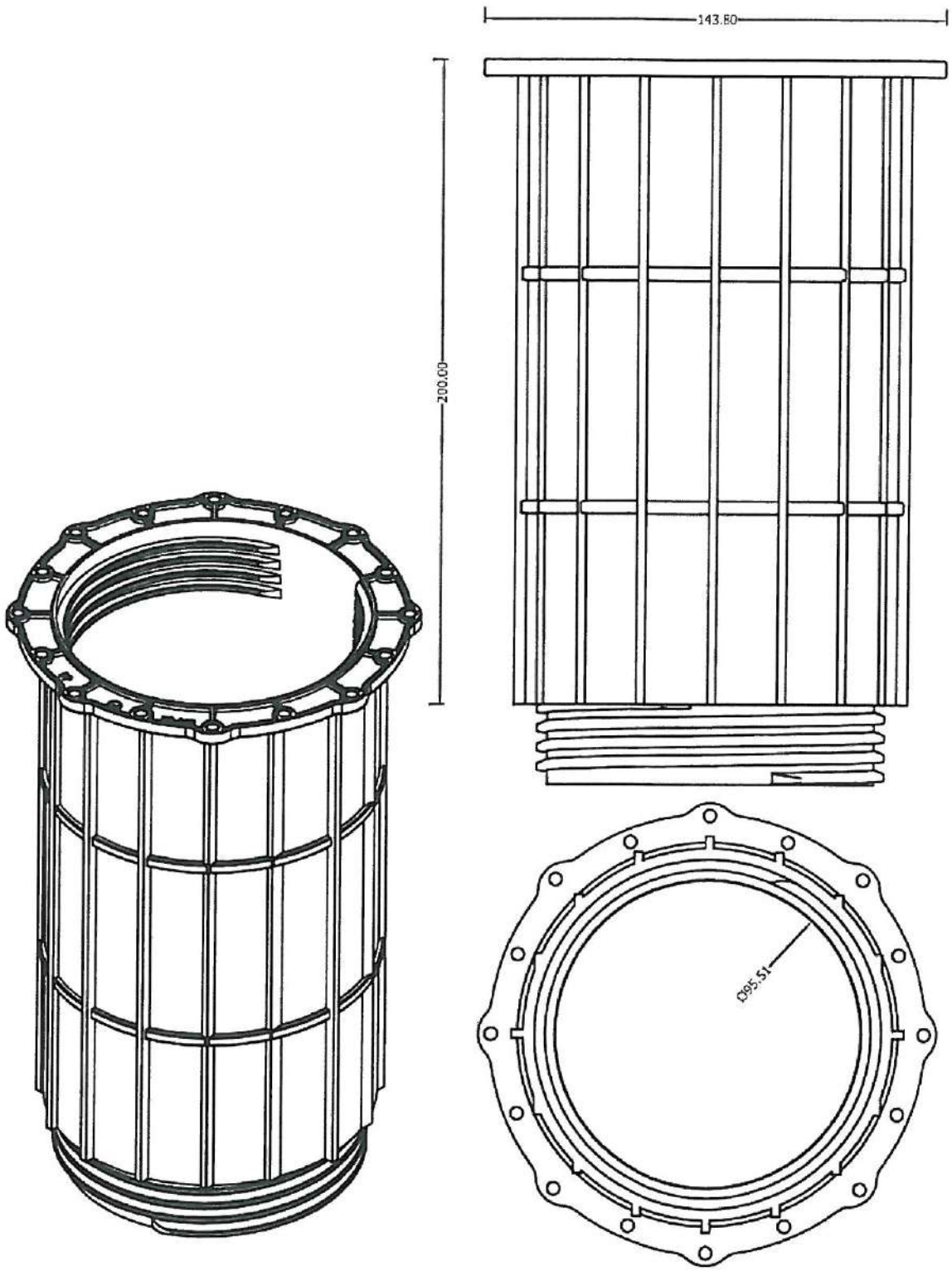

DECK-DRY POLSKA SP. Z O.O.
ABRAHAMA 48
80-307 GDAŃSK
NIP 584-11-83-361

Draw. 11.02.30 - **SELF-LEVELING HEAD. 7% 16.5MM STANDARD DIMENSIONS**

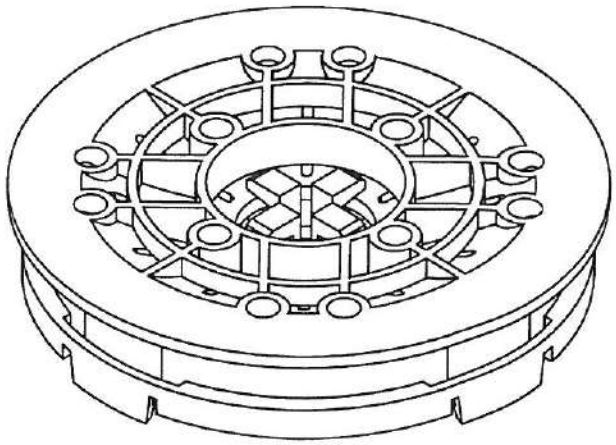

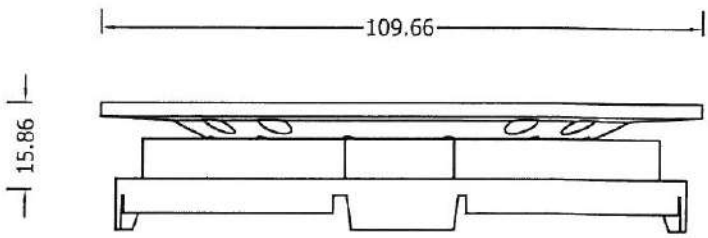

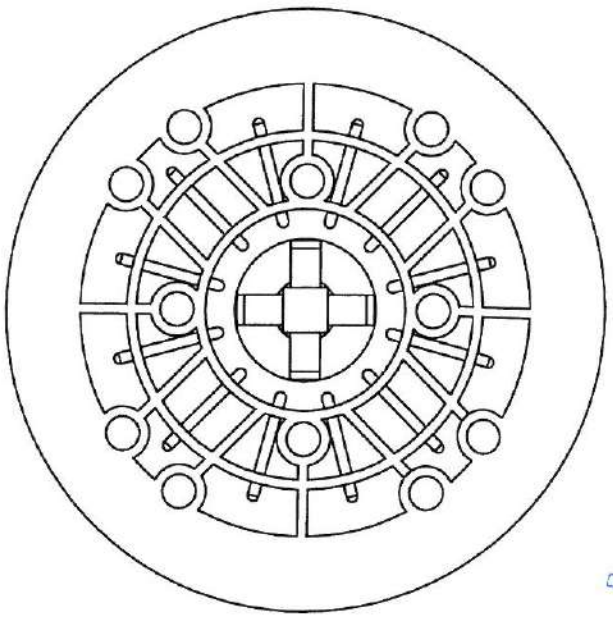

DECK-DRY POLSKA SP. Z O.O
ABRAHAMA 48
80-307 GDAŃSK
NIP 584-11-83-361

Draw. 11.02.31 - VERTICAL CLOSURE CLIPS - UPPER

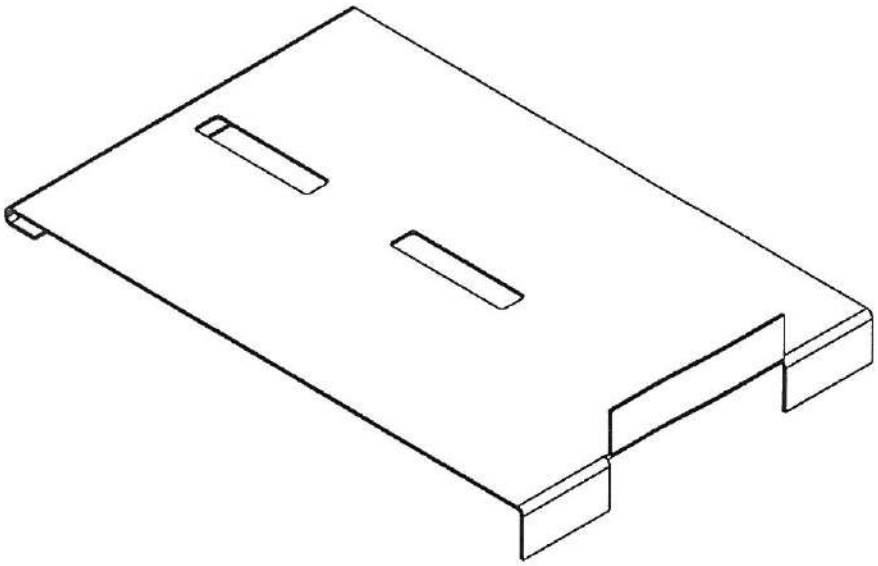

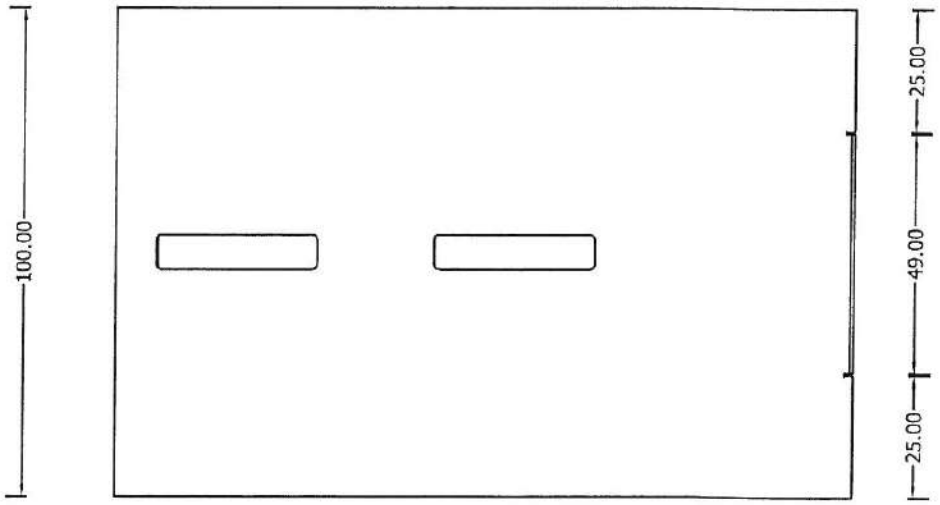

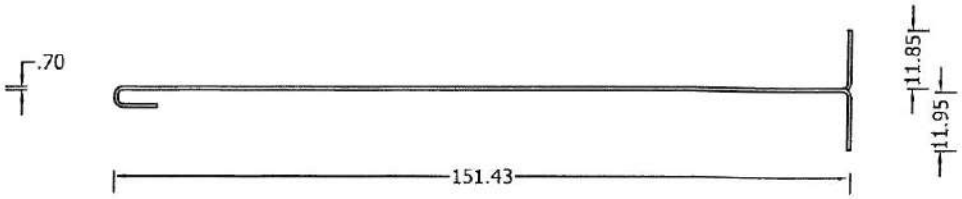

DECK-DRY POLSKA SP. Z O.O.
ABRAHAMA 48
80-307 GDAŃSK
NIP: 584-11-83-361

Draw. 11.02.32 - VERTICAL CLOSURE CLIP - LOWER

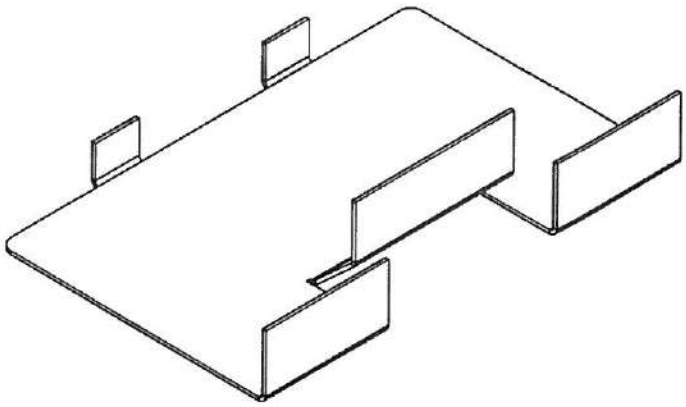

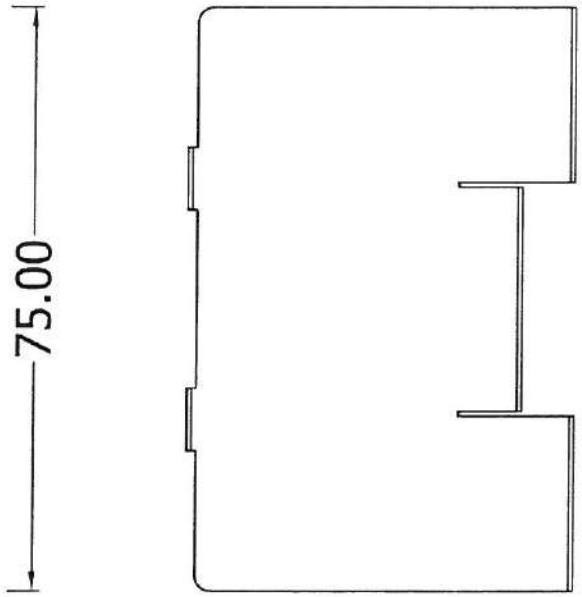

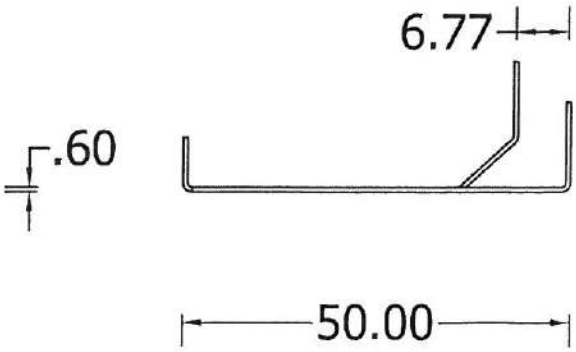

DECK-DRY POLSKA SP. Z O.O.
ABRAHAMA 48
80-307 GDAŃSK
NIP 584-11-83-361

Draw. 11.02.33 - EDGE SPACER CLIP

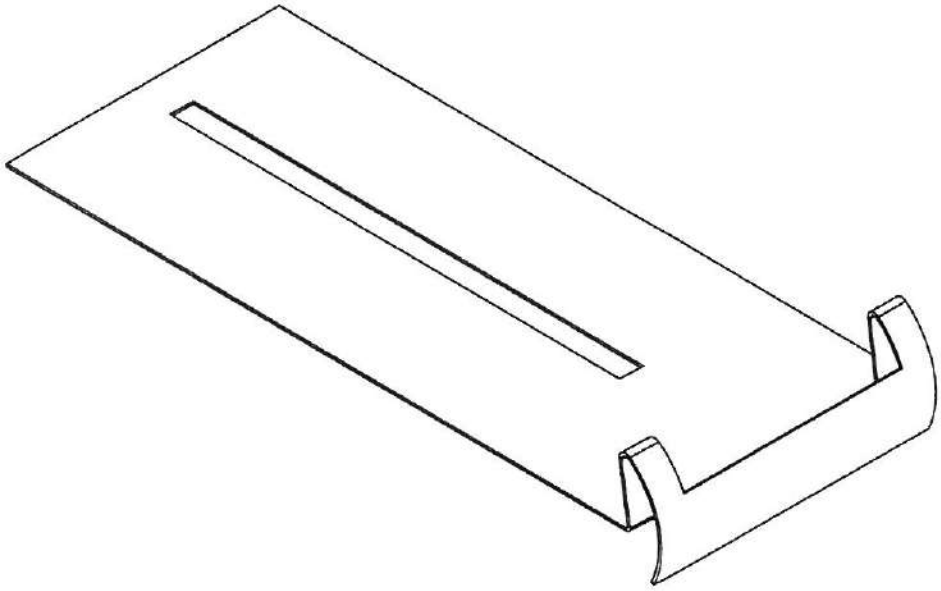

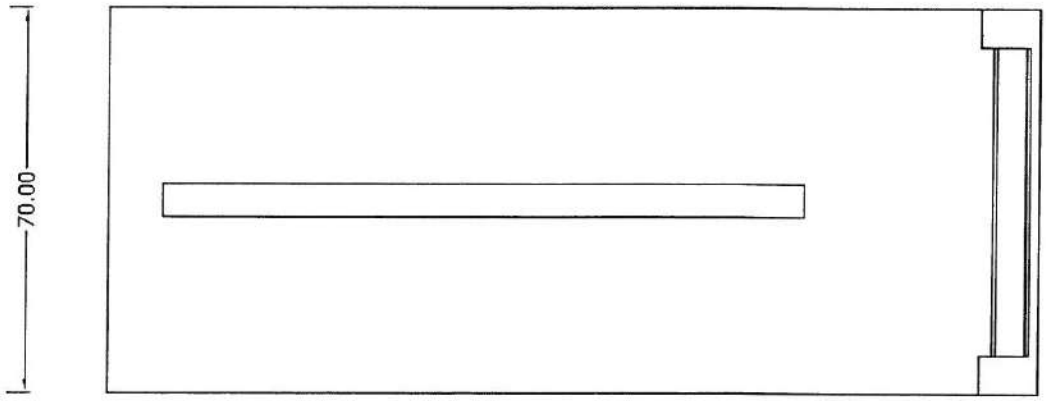

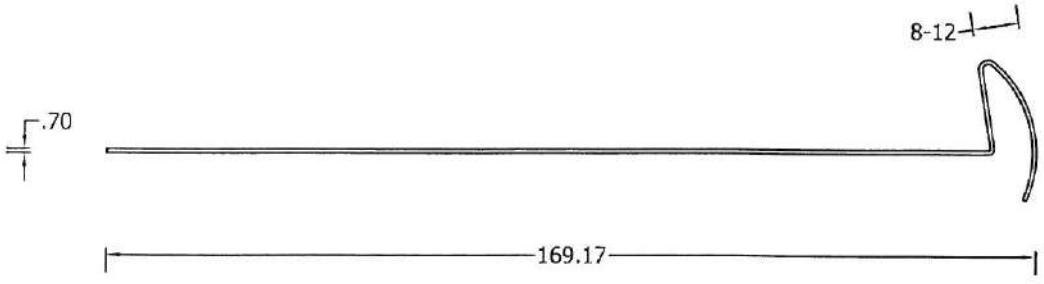

DECK-DRY POLSKA SP. Z O.O.
ABRAHAMA 48
80-307 GDAŃSK
NIP: 584-11-83-361

Draw. 11.02.34 - SELF-LEVELING HEAD MAX 19MM 6%

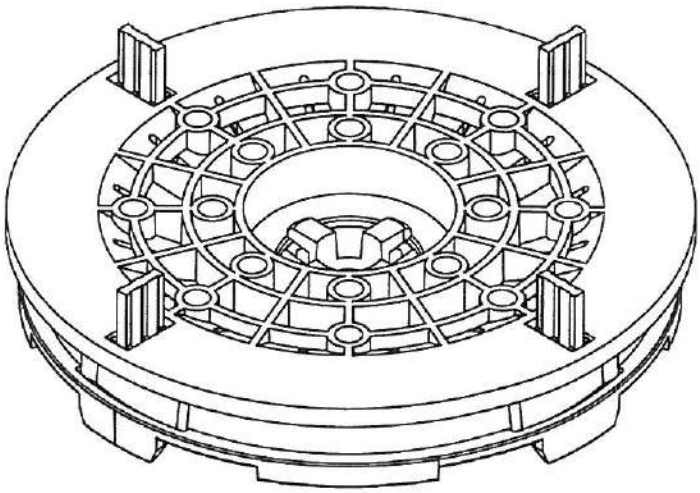

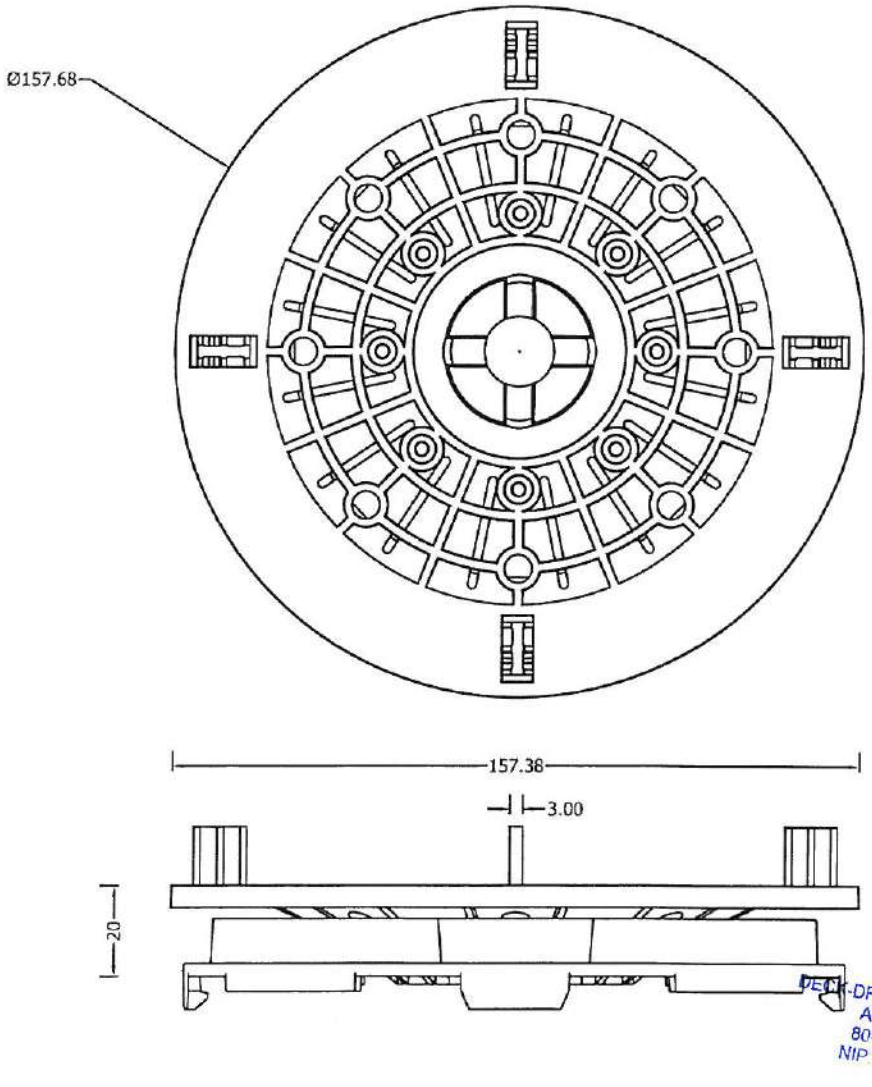

DECK-DRY POLSKA SP. Z O.O.
ABRAHAMA 48
80-307 GDAŃSK
NIP: 584-11-83-361

Draw. 11.02.35 - BASE SLOP CORRECTOR 16MM 8%

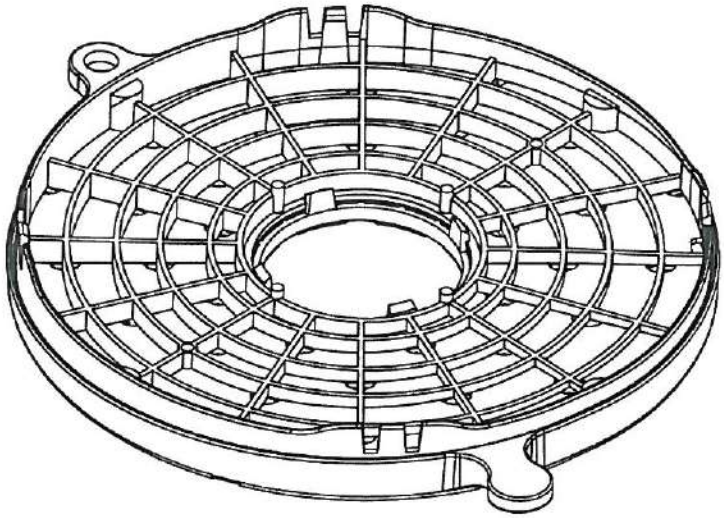

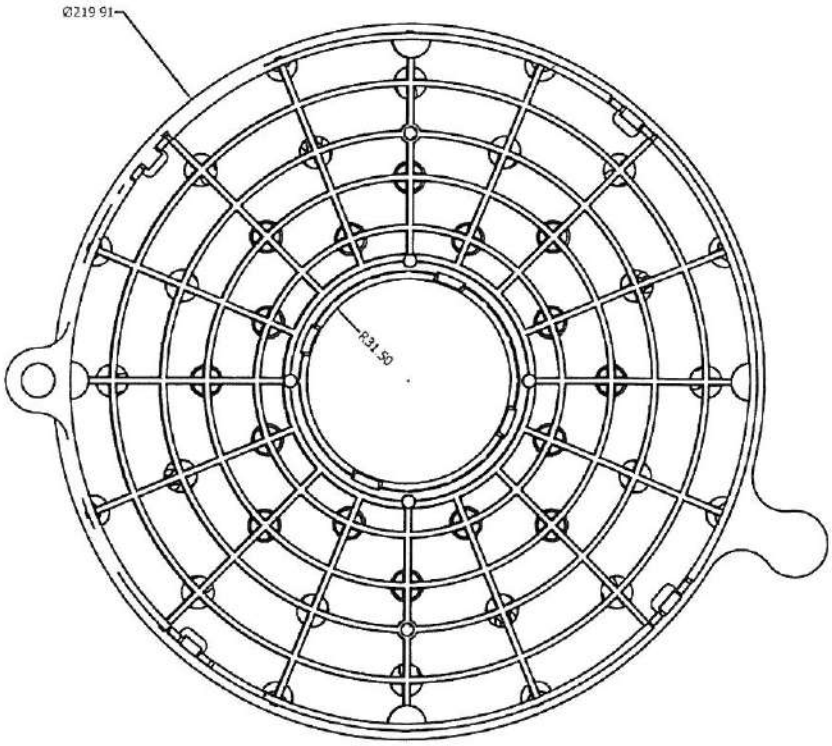

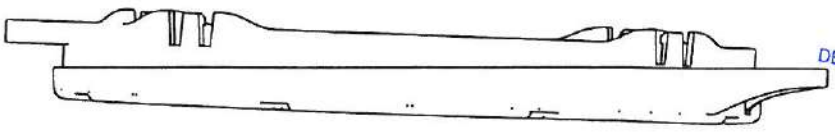

DECK-DRY POLSKA SP. Z O.O.
ABRAHAMA 48
80-307 GDAŃSK
NIP: 584-11-83-361

Draw. 11.02.36 - RUBBER SHIM ⌀100 1.5 MM 1/16 "

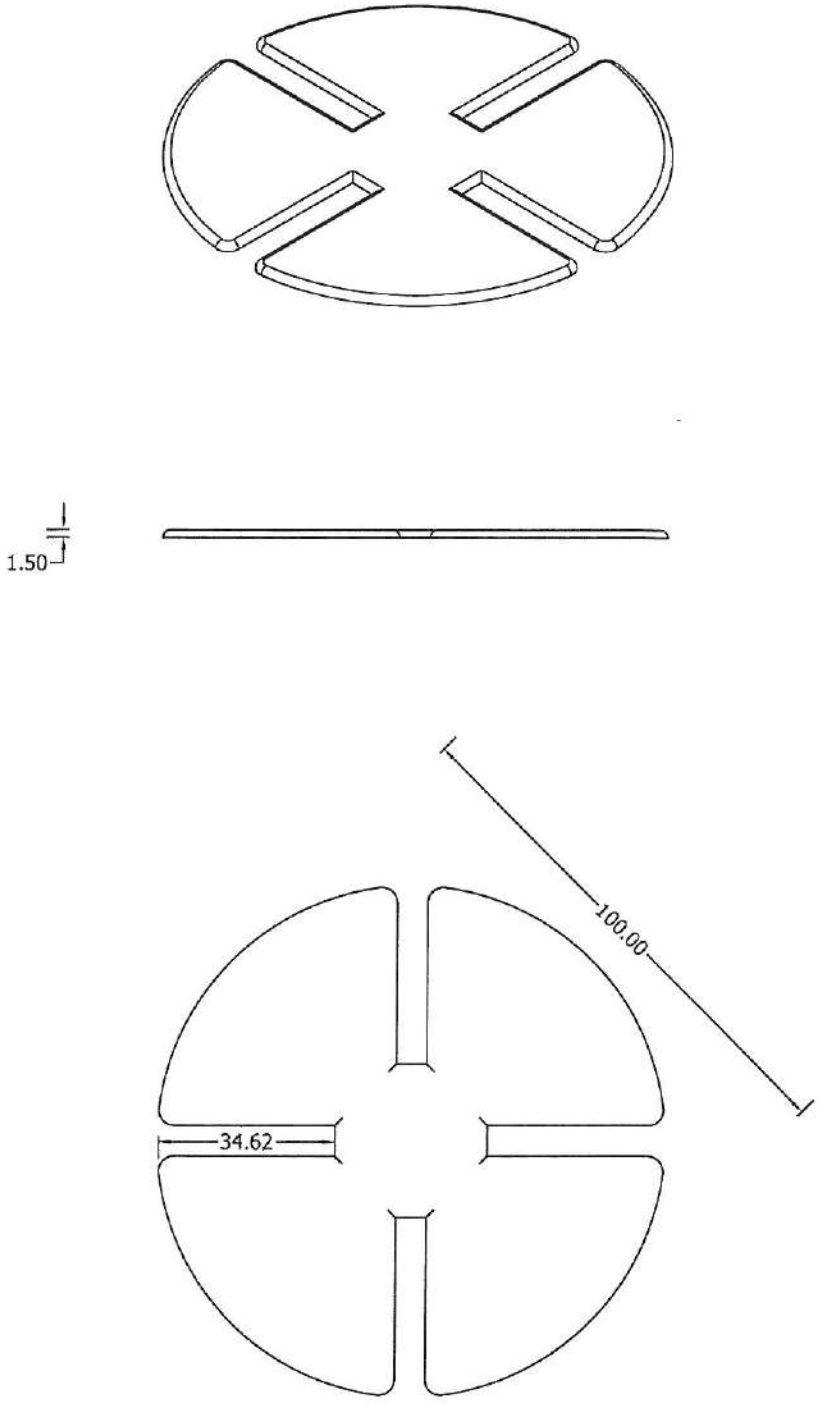

DECK-DRY POLSKA SP Z O.O.
ABRAHAMA 48
80-307 GDAŃSK
NIP 584-11-83-361

Draw. 11.02.37 - RUBBER SHIM ⌀145 1.5 MM 1/16 "

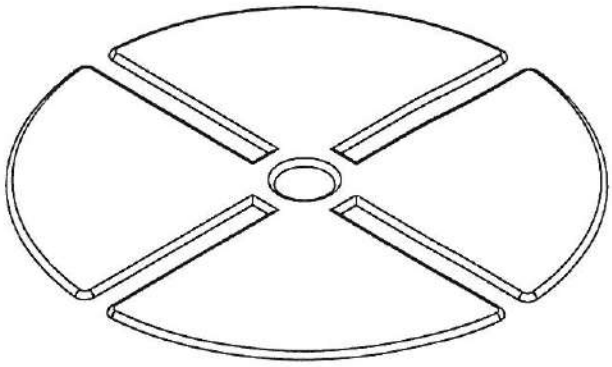



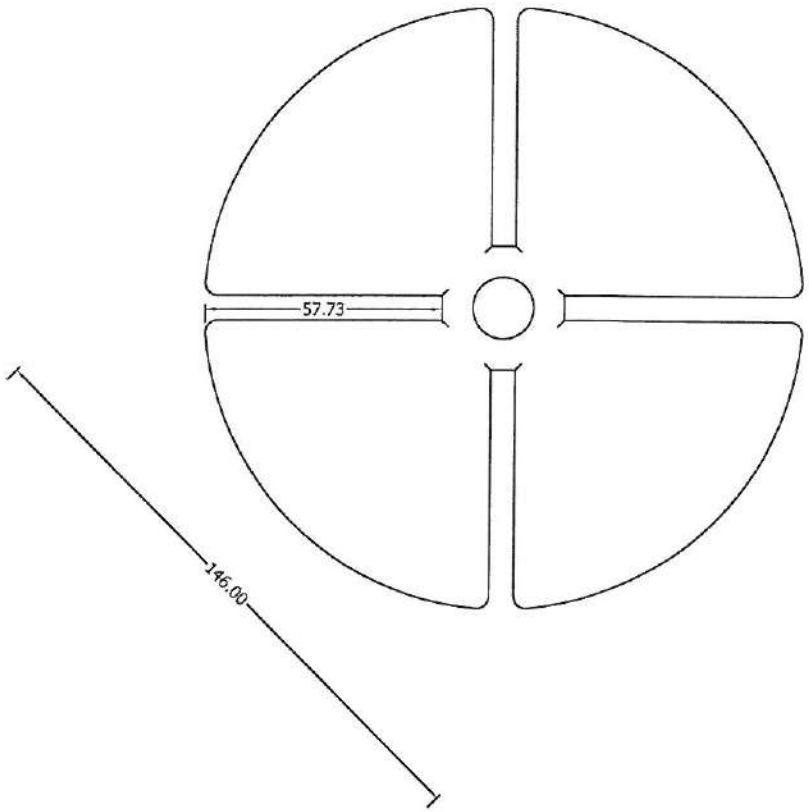

DECK-DRY POLSKA SP. Z O.O.
ABRAHAMA 48
80-307 GDAŃSK
NIP. 584-11-83-361

Draw. 11.02.38 - RUBBER SHIM ⌀145 1.5 MM 1/16 "

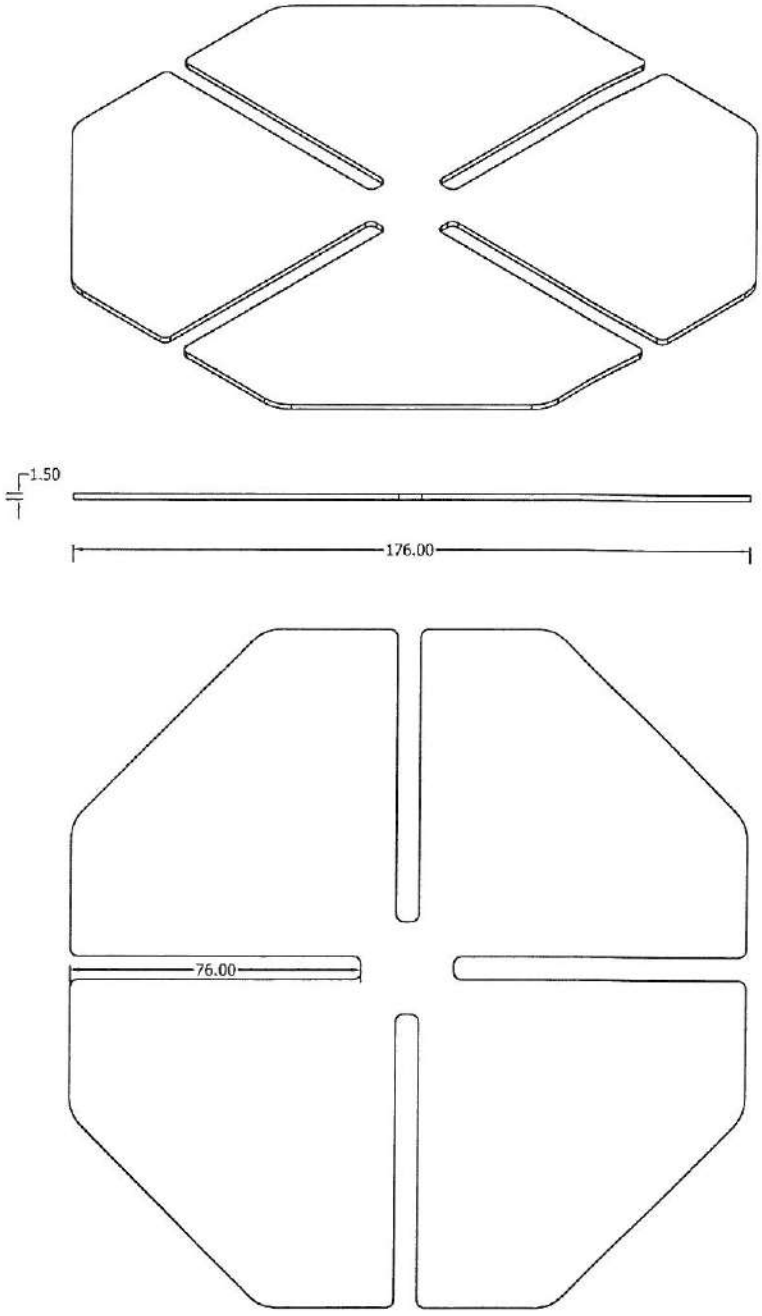

DECK-DRY POLSKA SP. Z O.O.
ABRAHAMA 48
80-307 GDAŃSK
NIP: 584-11-83-361

Draw. 11.02.39 - JOIST ADAPTER AD

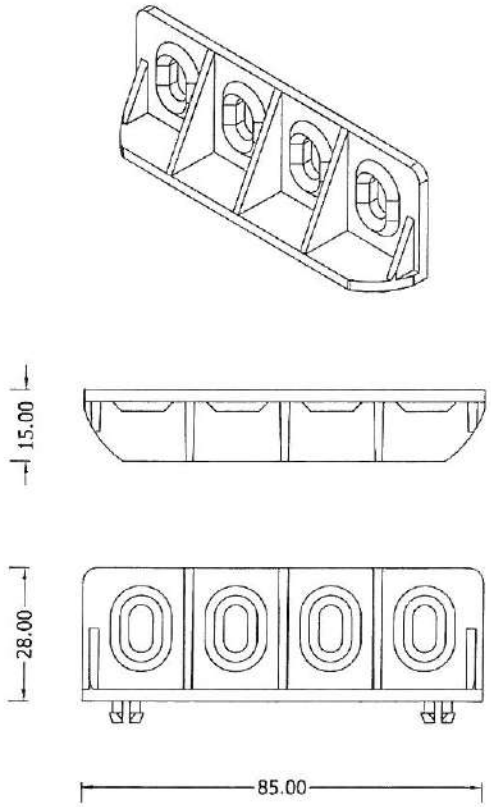

Draw. 11.02.40 - GAP SPACERS 3MM (1/8 ")

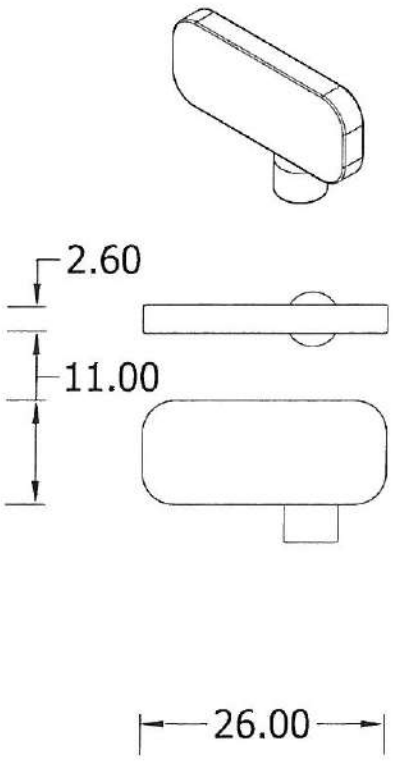

DECK-DRY POLSKA SP Z O.O.
ABRAHAMA 48
80-307 GDAŃSK
NIP 584-11-83-361

Draw. 11.02.41 - GAP SPACERS 5MM (13/64 ")

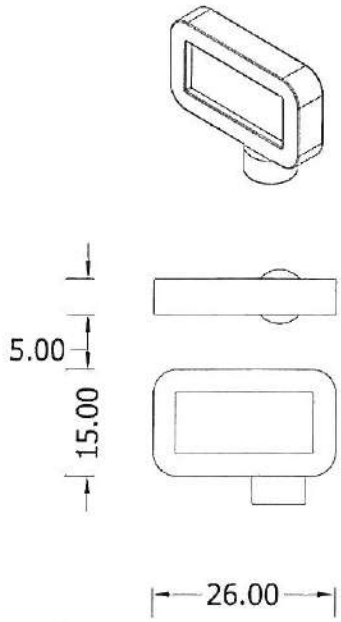

Draw. 11.02.42 - CROSS SPACERS 3MM (1/8 ")

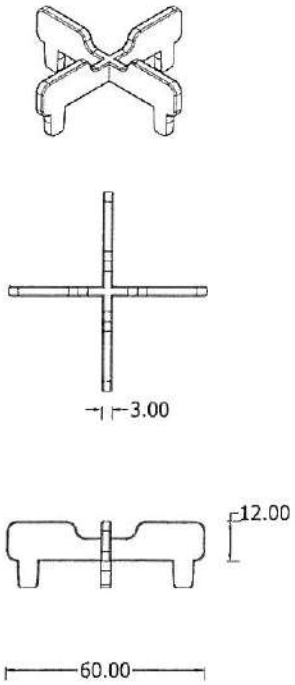

DECK-DRY POLSKA SP. Z O.O.
ABRAHAMA 48
80-307 GDAŃSK
NIP: 584-11-53-361

Draw. 11.02.43 - ROTABLE GAP SPACER DISCS 3 MM (⅛ ")

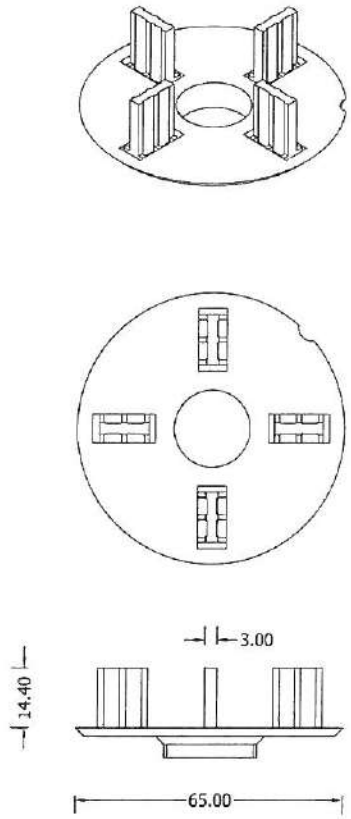

Draw. 11.02.44 - ROTABLE GAP SPACER DISCS 5 MM (13/64 ")

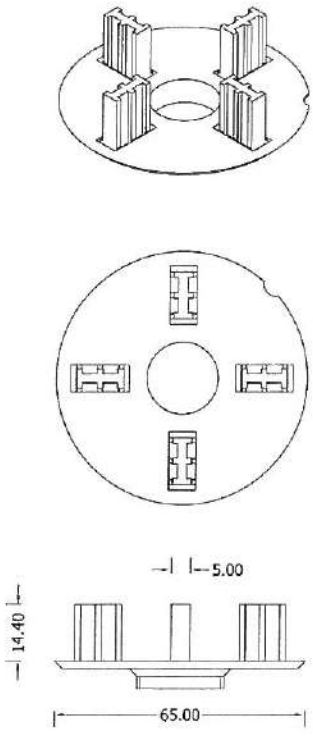

DECK-DRY POLSKA SP. Z O.O.
ABRAHAMA 48
80-307 GDAŃSK
NIP: 584-11-83-361

Draw. 11.02.45 - MANUAL KEY

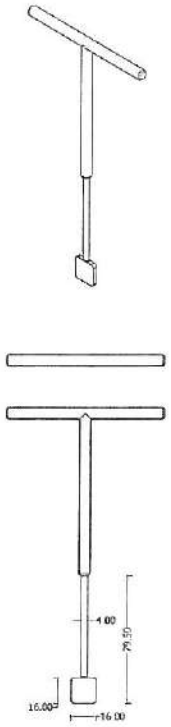

Draw. 11.02.46 - BIT TOOL

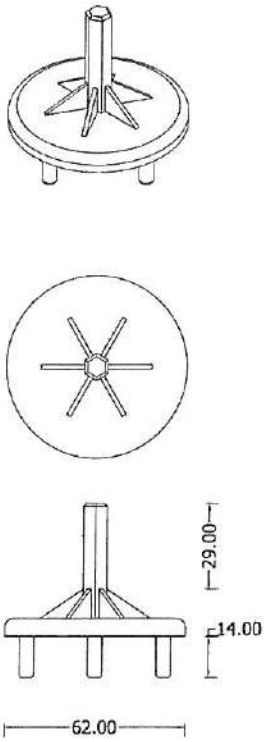

END

DECK-DRY POLSKA SP. Z O.O.
ABRAHAMA 48
80-307 GDAŃSK
NIP: 584-11-83-361