enviro lift

ADJUSTABLE PEDESTALS

for tiles and decking terraces

USER INSTRUCTION AND MAINTENANCE GUIDE

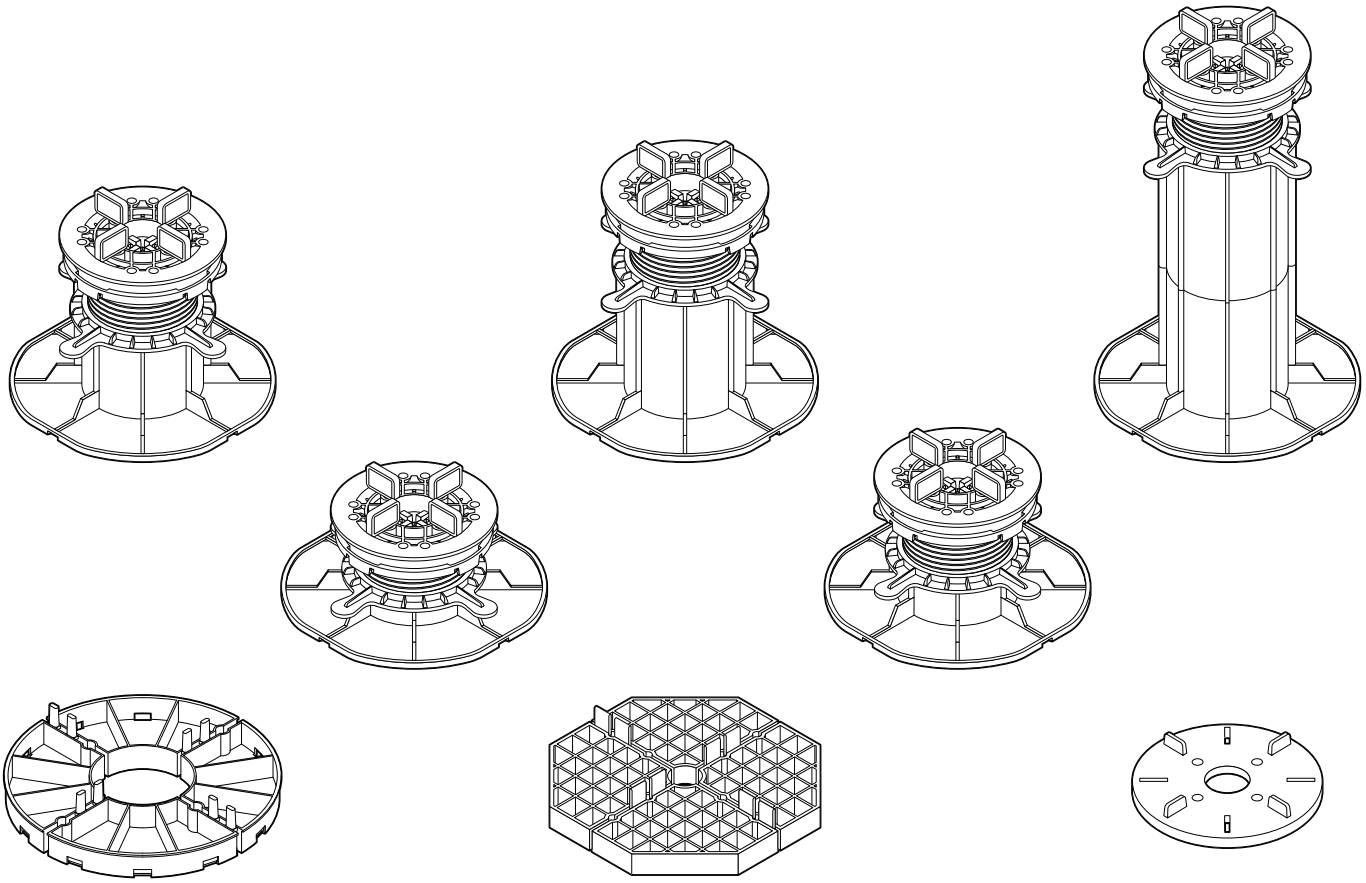

LIST OF CONTENT

List of content **2**

Products description **3**

Examples of pedestals usage **6**

Fixed height support pad 16 mm **8**

Description *8*

Breaking into modules *9*

Gap spacers *10*

Rubber shims *11*

Stackable *12*

Fixed height support pad 10 mm / 15 mm **13**

Description *13*

Breaking into modules *14*

Gap spacers *15*

Rubber shims *16*

Stackable *17*

Fixed height support pad 8 mm **18**

Description *18*

Gap spacers *19*

Rubber shims *20*

Stackable *21*

Adjustable height pedestals 30-420 mm **22**

Description *22*

Assemble *23*

Gap spacers *24*

Joist adapter *25*

Rubber shims *26*

Self leveling head *27*

Height regulation - screw ring *28*

Height extension - couplers *29*

SBR rubber pad 200x200x3 mm **30**

Positioning of gap spacers **31**

Steel clips **32**

Facia board covering **33**

Facia boards preparation *33*

Outer tiles preparation *34*

Facia board clips assemblance *35*

Spacer edge clip **37**

Tiles thickness difference **38**

Pedestals weight performance **39**

Important information **40**

Pedestals basis *40*

Water *41*

Pedestals locking **42**

Rawl plugging **43**

Cutting pedestals base **45**

Tiles cutting **46**

Roof draing / gaps **47**

Appropiate pedestals placement **48**

Project *48*

Heights *49*

Start installation *50*

A. Entrance on the terrace *51*

B. Low cavity *52*

C. Corners *53*

D. Diagonal *54*

E. Arc *55*

F. Roof drain *56*

Joists installation **57**

x **60**

PRODUCTS DESCRIPTION

No.	ELEMENT	NAME	DESCRIPTION
1		Gap spacer 3 mm	SPACER TABS to appoint installation gap (dilatation) dimension 3 i 5 mm. Thanks to the many holes in the pedestal top head, DD pedestals range is large. Besides cross track (under the terraces panels) are the posibility to track a spacer tab (under terraces joist) in such wides - 2,5 cm; 3,8 cm; 4 cm; 5 cm; 6 cm; 7 cm.
2		Gap spacer 5 mm	
3	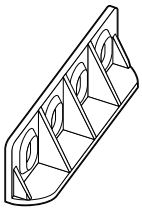	Joist adapter	Joist adapter is mounted to the pedestals head and allows to join decking joists to the pedestal.
4	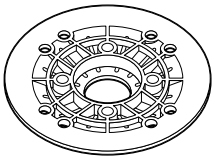	Self leveling head upper part LE-UPPER	Self leveling head consists of two separate elements - Upper and Lower. Self levelling head for DD Pedestals. Mount on the top of the pedestal and allow to reduce slope on the basis 0-7%. Height of the self leveling head is 16 mm.
5	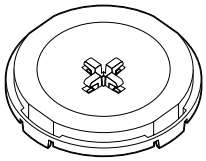	Self leveling head lower part LE-LOWER	
6	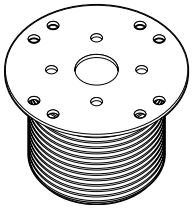	Screw DDP 01 DDP 02 DDP 03 DDP 04	SCREW of DD PEDESTALS present in 4 thread height ranges for four pedestals height. On the screw RING is screwed and and they are applied to pedestal BASE. The diameter of the upper surface head is 100 mm.
7	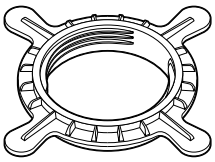	Screw Ring	SCREW RING is to fluently high adjustable pedestals. SCREW RING is screwed onto the SCREW of DD PEDESTALS and they are placed in pedestals BASE. SCREW RING has 4 ergonomic handle so you can easily adjust the height of the pedestal.

PRODUCTS DESCRIPTION

8

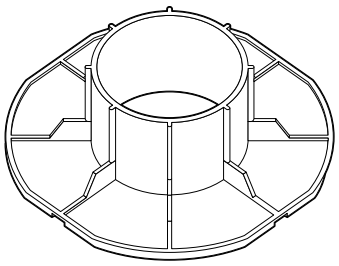

Base



BASE adjustable pedestals DD PEDESTALS present in 4 size for four pedestals height. In BASE applicate the SCREW with twisted NUT. The diameter of the lower surface is 168 mm. Diameter of inside the hole is 80mm.

9

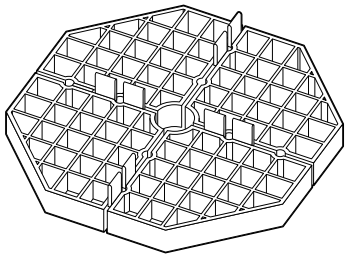

Fixed height support pad 16 mm

Modular fixed height support pad 16 mm. Used for laying terrace tiles in ventilated terraces system. It contains mounted 3 mm gap spacers and there is option to mount 5 mm spacer tabs.

10

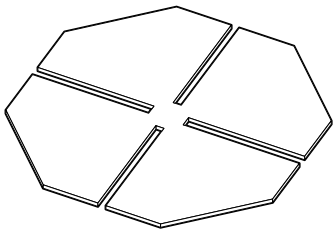

Rubber shim for 16 mm pad

Rubber shims to lay on the fixed height support pads 16 mm. Thickness 1,5 mm and 3,00. Used for tiles thickness inequality regulation and insulate noises

---

11

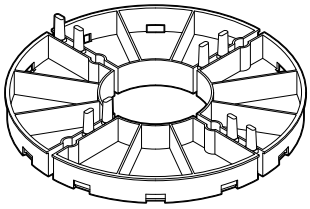

Fixed height support pad
10 mm
15 mm

Modular fixed height support pad 10 & 15 mm. Used for laying terrace tiles in ventilated terraces system. It contains mounted 3 mm gap spacers and there is option to mount 5 mm spacer tabs. Contain internal holes to let water run out.

12

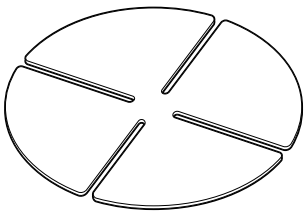

Rubber shim for 10 and 15 mm pad

Rubber shims to lay on the fixed height support pads 10 & 15 mm. Thickness 1,0 mm and 2,00. Used for tiles thickness inequality regulation and insulate noises

---

13

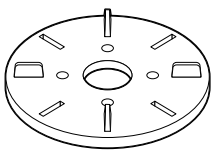

Fixed height support pad
8mm

Rubber fixed height support pad 8 mm. Used for laying terrace tiles in ventilated terraces system. It contains mounted 3 mm gap spacers and there is option to mount 5 mm spacer tabs. Rubber material has additional ability to reduce noises of sand grains.

PRODUCTS DESCRIPTION

14	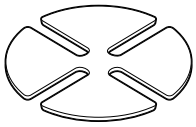	Rubber shim for 8 mm pad	Rubber shims to lay on the fixed height support pads 8 mm. Thickness 1,0 mm and 2,00. Used for tiles thickness inequality regulation and insulate noises.
15	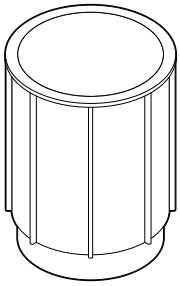	Height coupler DS 100 MM	Height coupler for pedestal DDP height extension. Each coupler raise pedestal size 100 mm. Height coupler is placed in pedestal base.
16	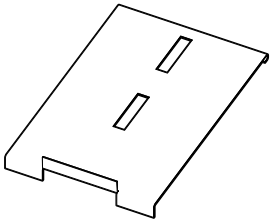	Facia board clip upper DDPEDU	
17	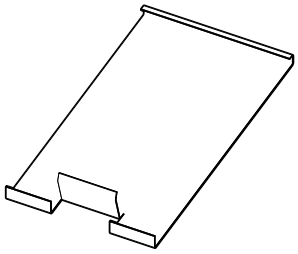	Facia board clip lower DDPEDU	Vertical edge clip for mounting facia board. Stainless steel clips for DDP Pedestals mount on the base of the pedestal.
18	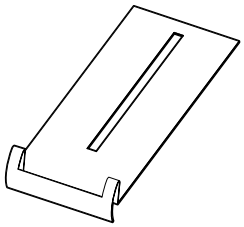	Up to wall clip DDPWA	Up to wall clip for making edge/gap space between terrace and wall.
19	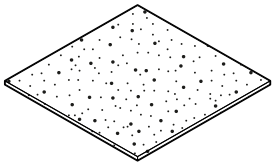	SBR Granulate Pads 200x200 mm	SBR granulate rubber pad as pedestal base underlay. Prevent possible damage on the water isolation membrane. Sound insulation properties.

EXAMPLES OF PEDESTALS USAGE

Pedestals DDP with decking joists

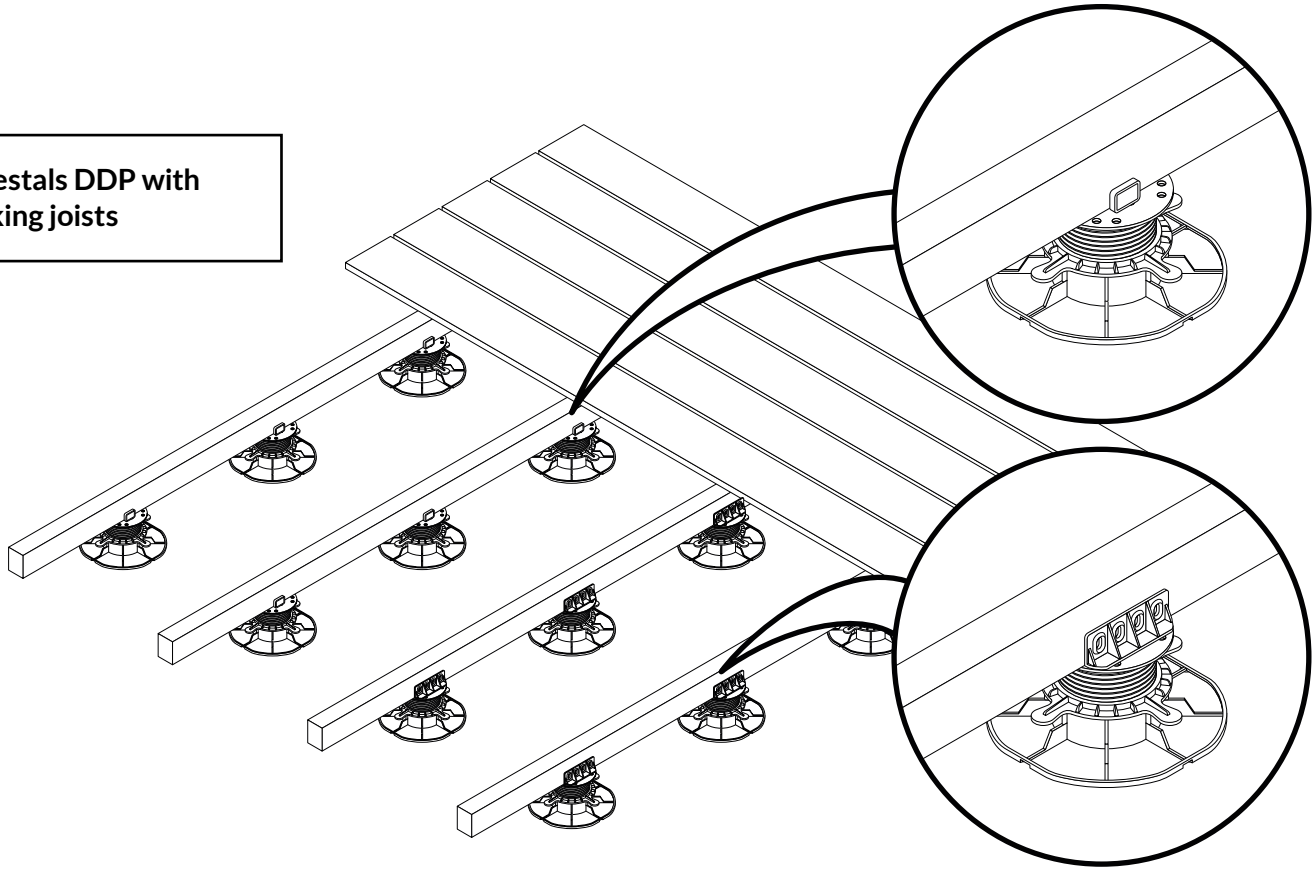

Pedestals DDP with terrace tiles

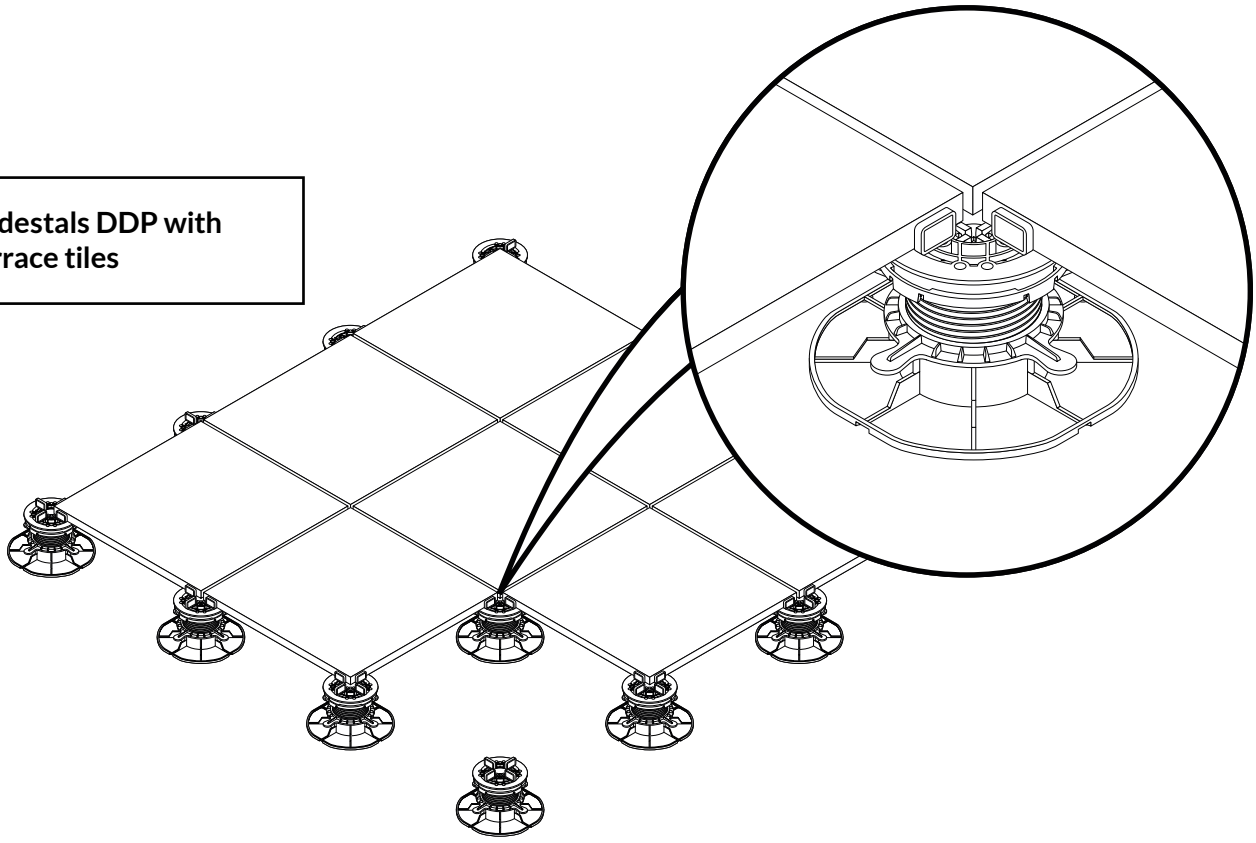

Fixed height support pad
16 mm with terrace tiles

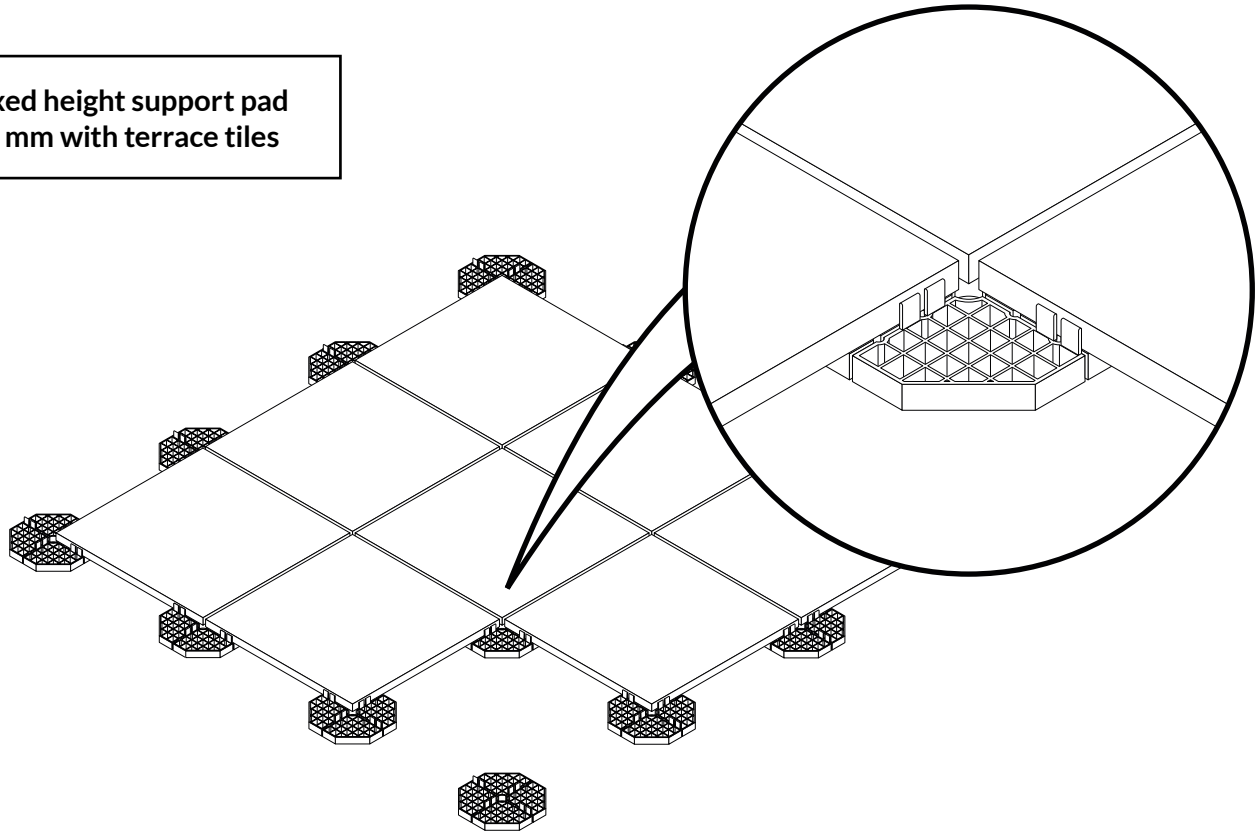

Fixed height support pad
10 mm with terrace tiles

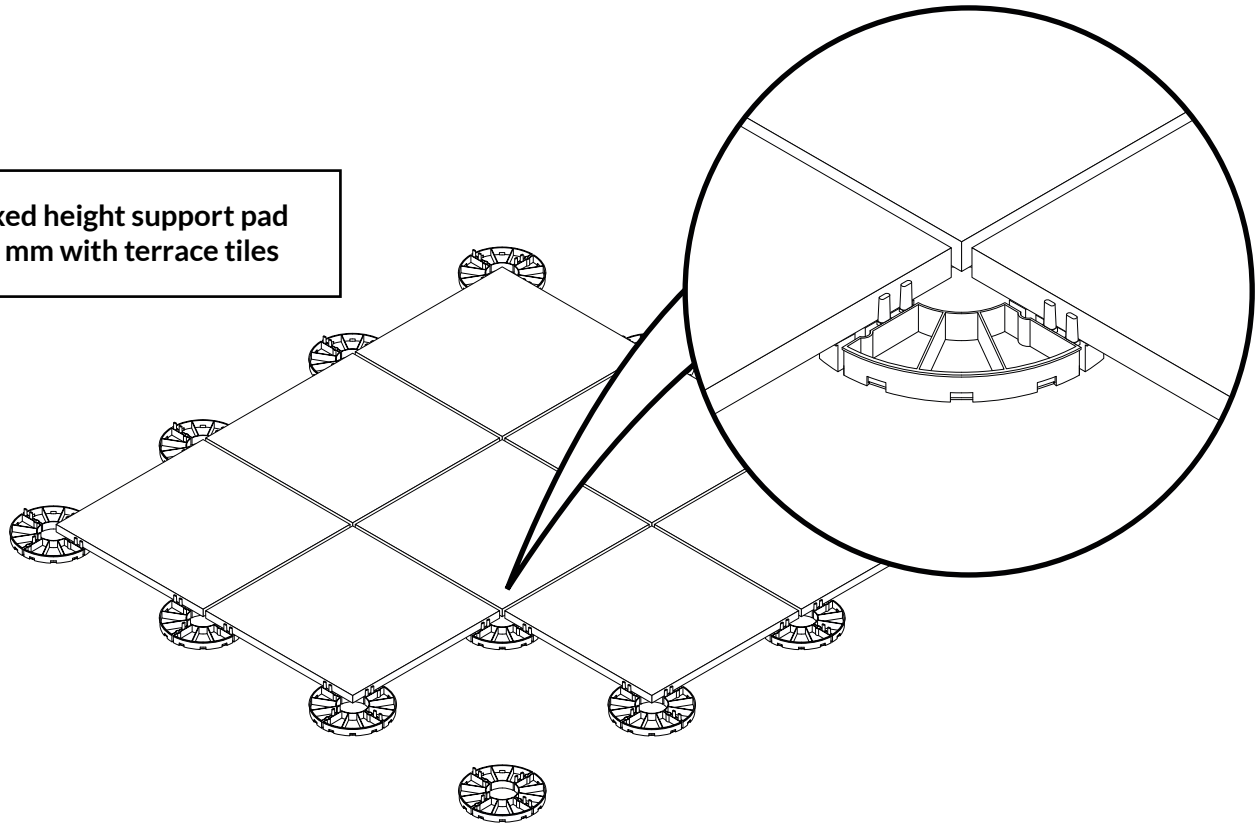

FIXED HEIGHT SUPPORT PAD 16 MM

DESCRIPTION

Fixed height support pad DDP 16 mm

Modular support pad with fixed height 16 mm. This fixed height support pad is for laying on the terraces, roofs, water insulation. Fixed height support pads do not need any additional materials, plasters etc. for its installation.

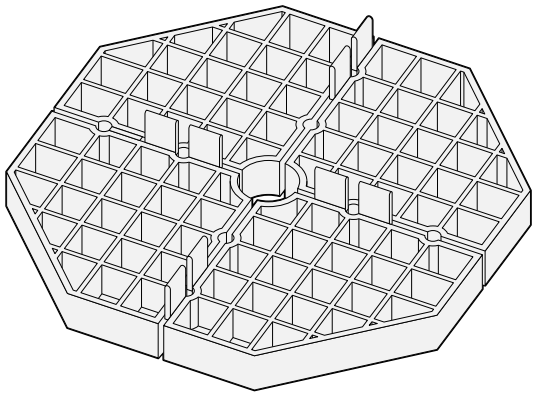

Technical data

Size:
Width: 176 mm
Height: 16 mm
Length: 176 mm

Material: PP

Weight performance: 750 kg

Temperature tolerance: x

Built in spacer tabs: 3mm

Modular: Yes, break into 4 pieces

Height regulation: Yes, stackable and rubber shims.

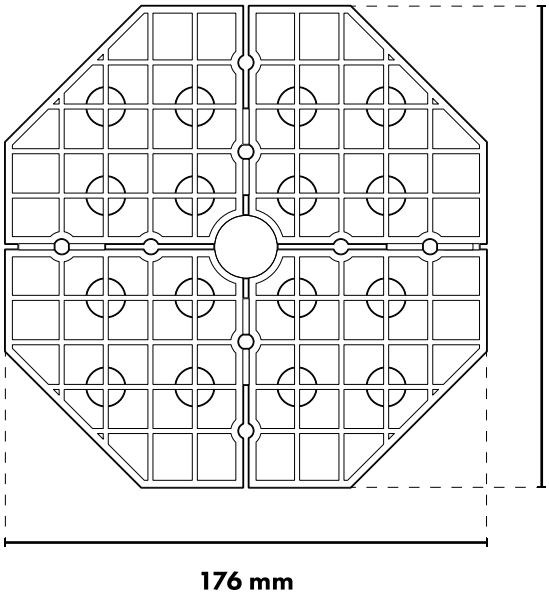

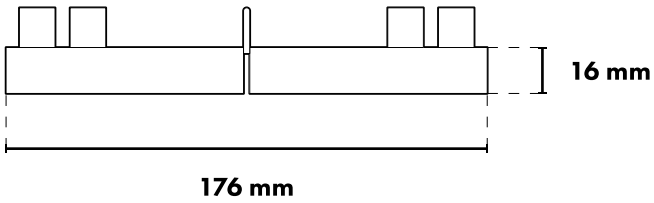

FIXED HEIGHT SUPPORT PAD 16 MM
BREAKING INTO MODULES

Breaking support pad into modules

Support pads can be break into separate modules. Modules can be placed along to wall tiles and corners. Breaking pads is done withous any additional tools.

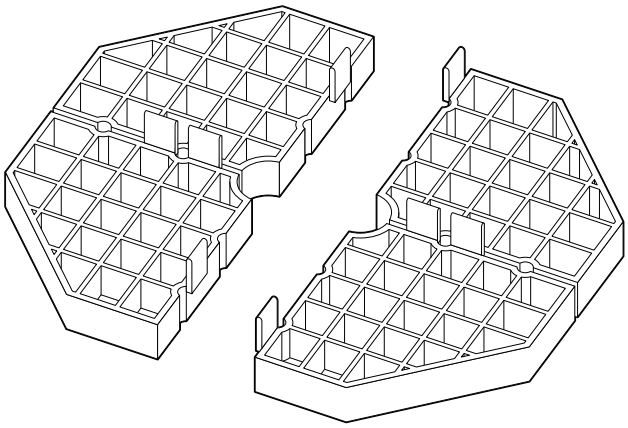

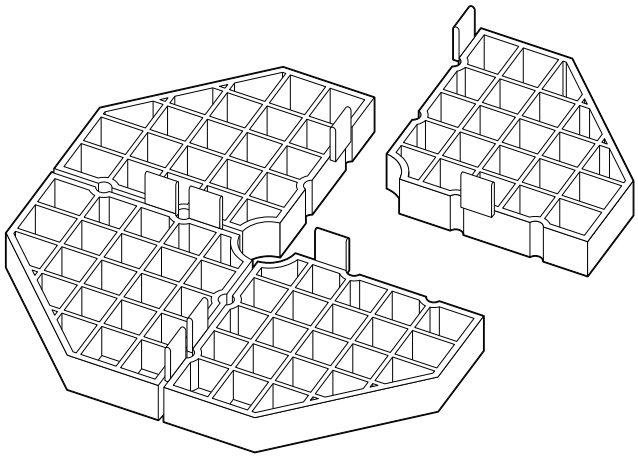

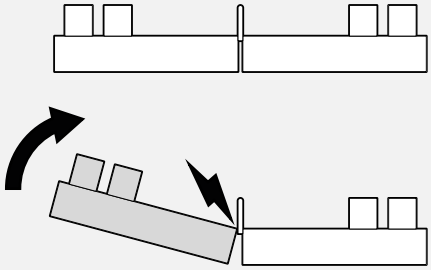

Breaking into modules

To break into modules fold support pad until it breaks in divide sections.

1 module

Corners

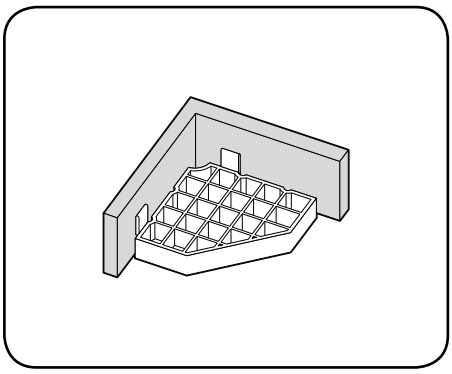

2 modules

Along the walls

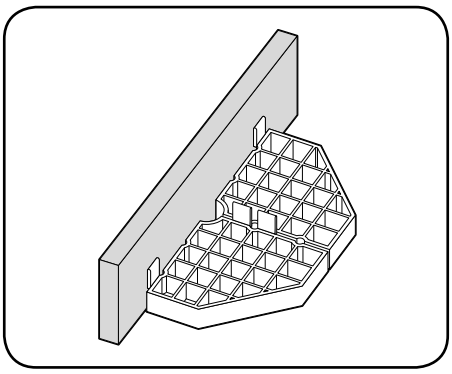

3 modules

Outside corners

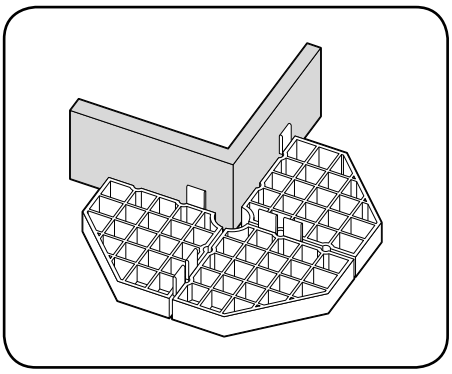

FIXED HEIGHT SUPPORT PAD 16 MM GAP SPACERS

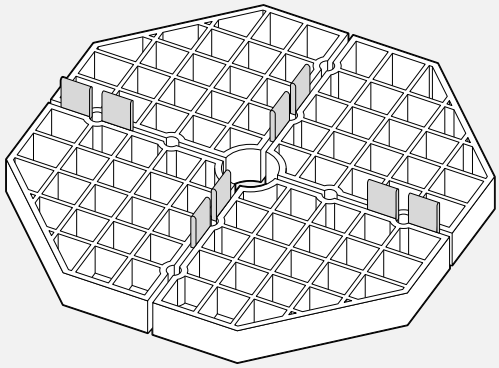

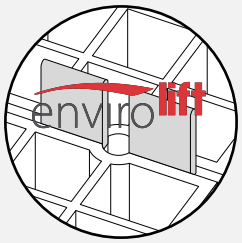

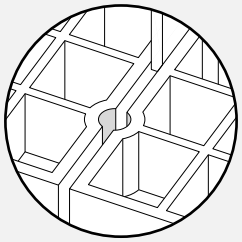

Built in gap spacer 3 mm

Support pads contain built in gap spacer tabs 3 mm.

External spacer tabs 5 mm

Additional gap spacer tabs 5 mm can be placed in position shown on image.

Gap spacers placement

To increase gap width place additional spacer tabs 5 mm in position as below.

1

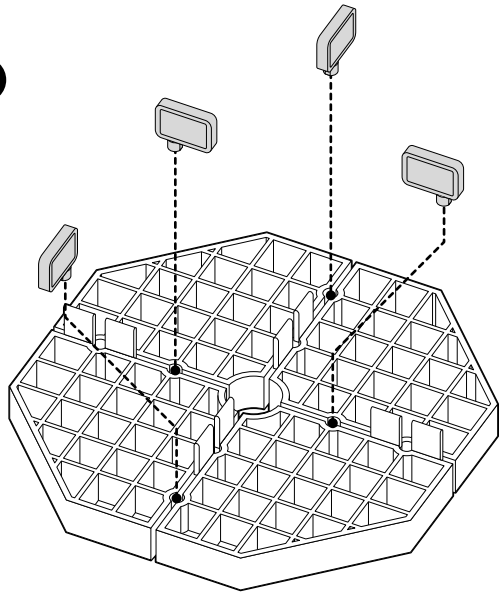

2

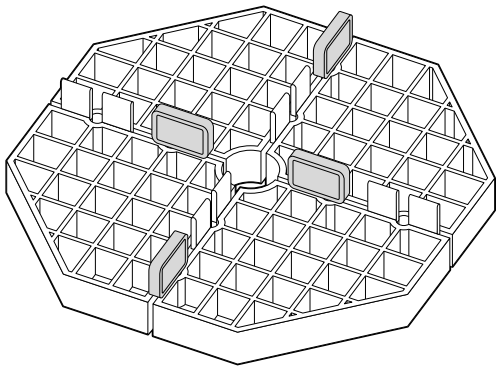

FIXED HEIGHT SUPPORT PAD DDP MM RUBBER SHIMS

Rubber shims for usage with Fixed Height Support Pad 16 mm.

The Fixed height support pad 16 mm has its dedicated rubber shim.

1

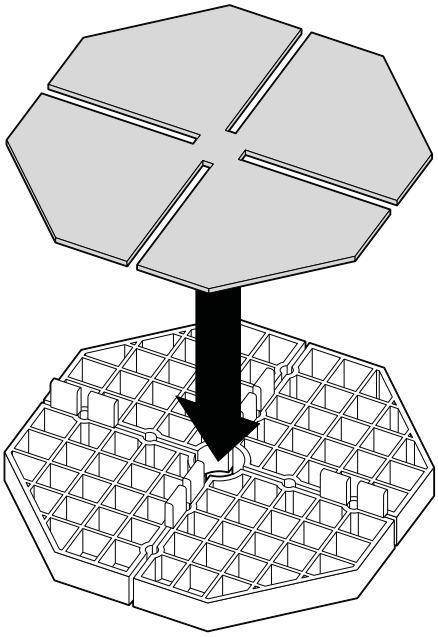

2

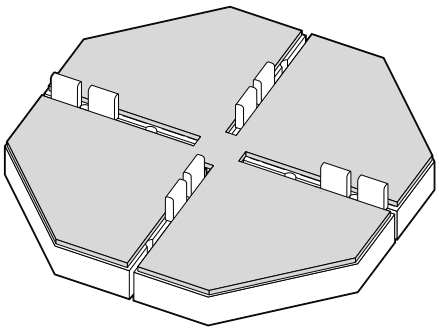



Noise reduction

Rubber shims reduce noises and sand grains sound which stay between pad and tile.

Dividing rubber shims into pieces.

Rubber shims can be divided in pieces. Each quarter can be used to reduce differences between tiles thickness. You can cut it by hand or scissors. Additional usage for noise reduction etc. is also possible.

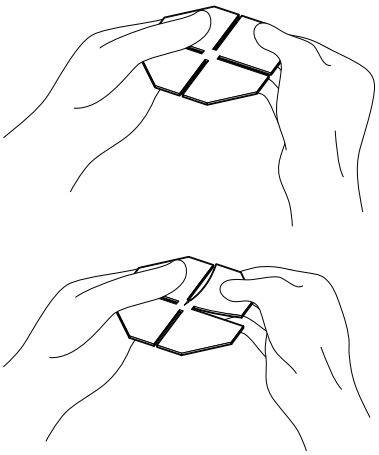

You can also use scissors to cut shim.

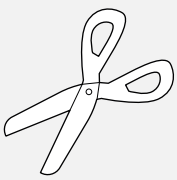

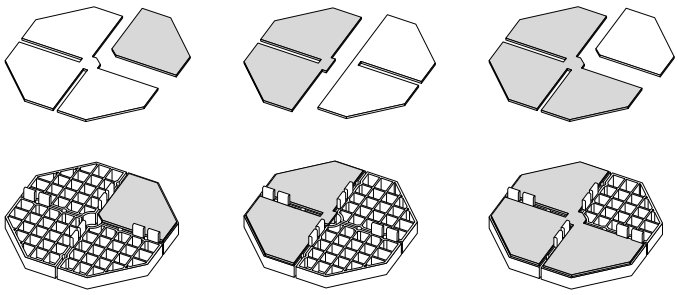

FIXED HEIGHT SUPPORT PAD 16 MM STACKABLE

Stacking Fixed Height Support Pads

Support Pads can be stacked on each other. To achieve height 32 mm connect 2 parts. Gap spacers must be placed in correct position.

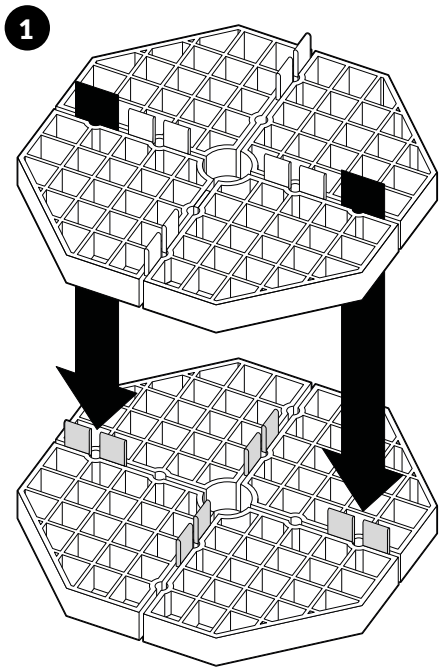

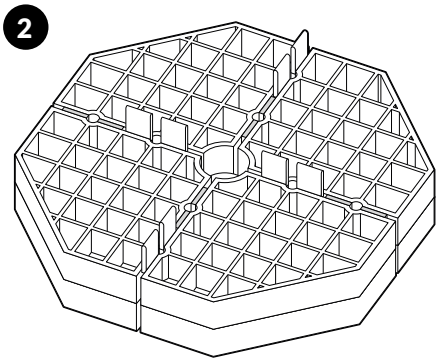

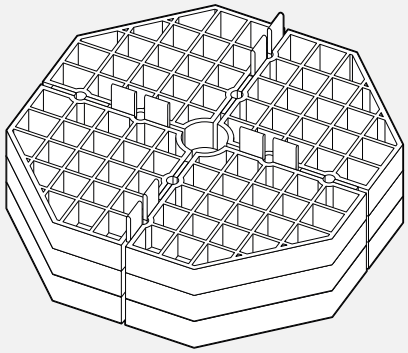

Max 3 pcs.

We suggest to not stacking more than 3 pcs. of support pads (48 mm).

FIXED HEIGHT SUPPORT PAD 10 MM / 15 MM

DESCRIPTION

Fixed height support pads 10 / 15 mm.

Fixed height support pads 10 mm / 15 mm for tiles. Support pads can be used for external ventilated terraces. Tiles made of concrete, pressed concrete, ceramic, stone, marble, granite etc. Terraces will have same slope as the terrace basis. For installation there is no need of any specialistic tools or materials as needed with traditional terraces glued on plaster.

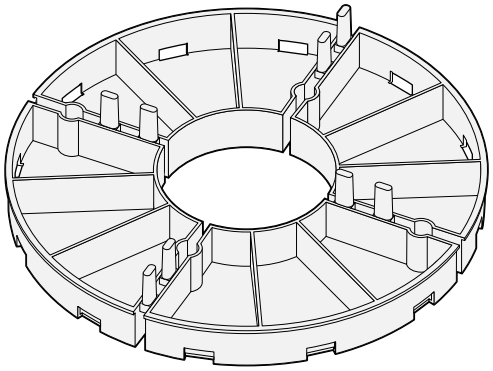

Technical data

Size:
Diameter: 146 mm
Height: 10/15 mm

Material: PP

Weight performance: 450 kg

Temperature tolerance: x

Built in spacer tabs: 3mm

Modular: Yes, break into 4 pieces

Height regulation: Yes, stackable and rubber shims.

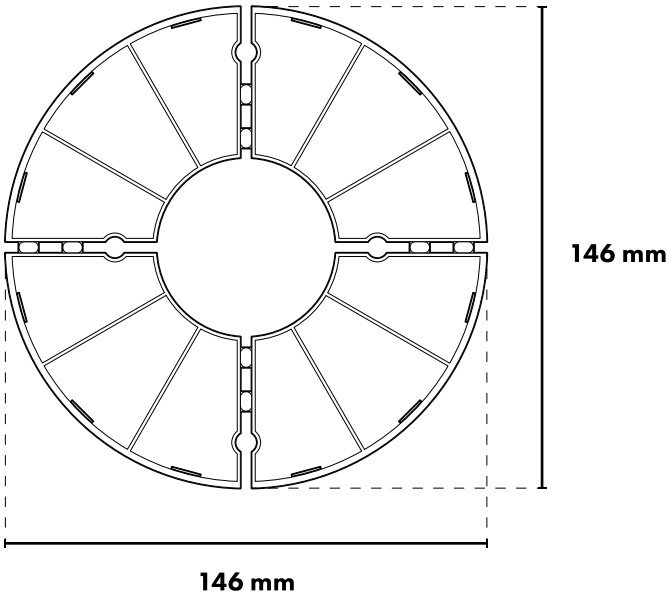

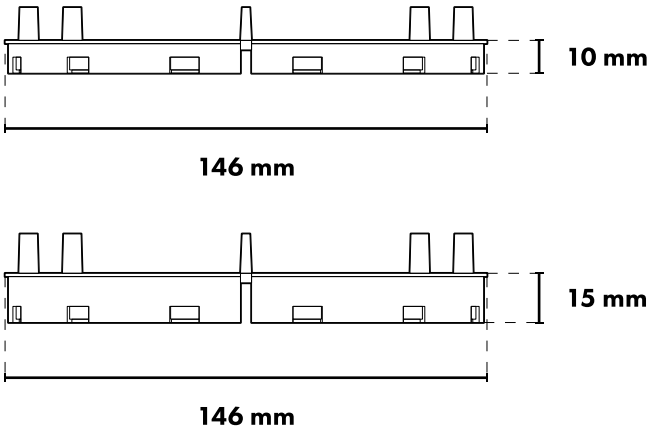

FIXED HEIGHT SUPPORT PAD 10 MM / 15 MM
BREAKING INTO MODULES

Breaking support pad into modules

Support Pads are buit from 4 connected modules. This allows to break pads into pieces. Halves to lay along the wall and quarter to lay in the terrace corners. Breaking into pieces can be done without any tools.

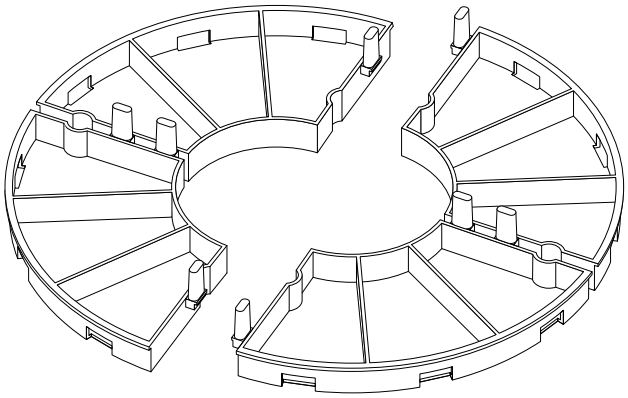

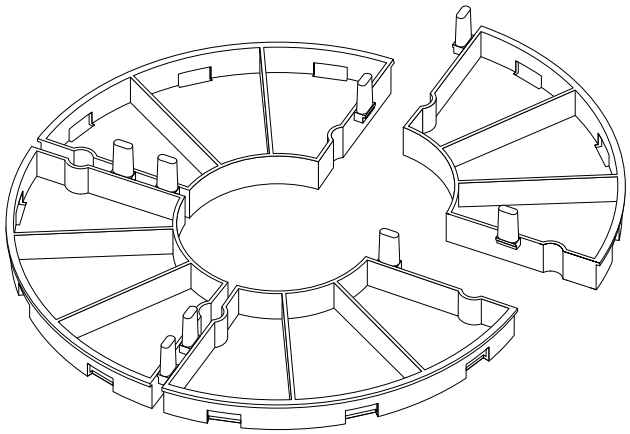

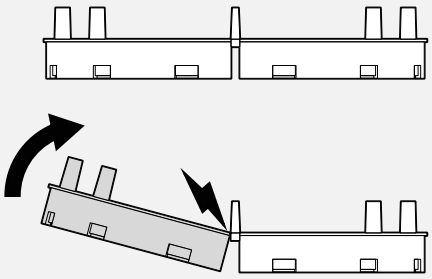

Breaking into modules

To break into modules fold support pad until it breaks in divide sections.

1 module

Corners.

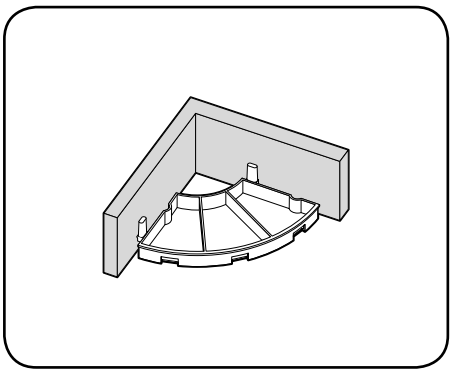

2 modules

Along the walls.

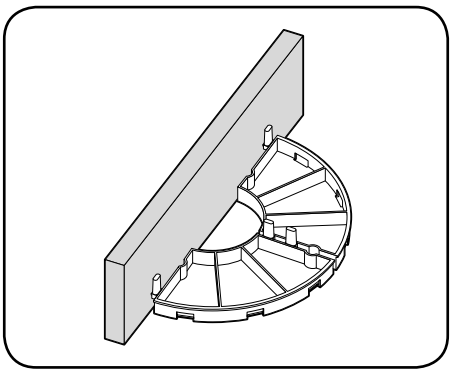

3 modules

Outside corners.

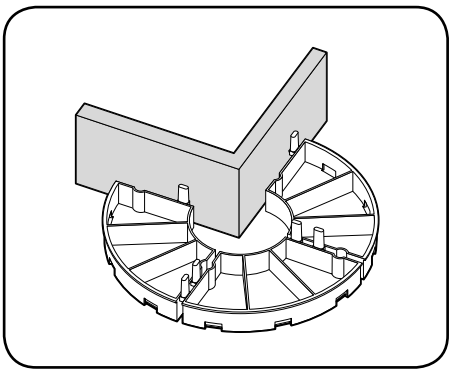

FIXED HEIGHT SUPPORT PAD 10 MM / 15 MM GAP SPACERS

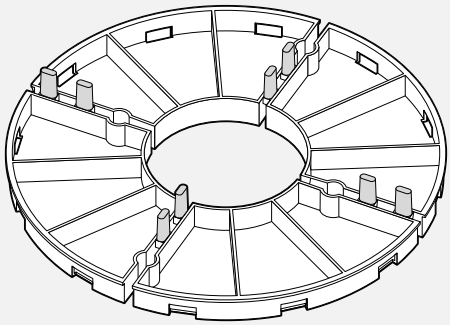

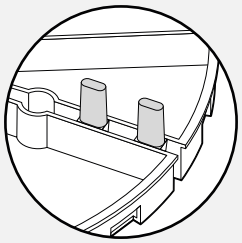

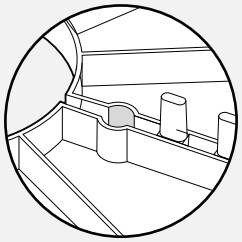

Built in gap spacer 3 mm

Support pads contain built in gap spacer tabs 3 mm.

External spacer tabs 5 mm

Additional gap spacer tabs 5 mm can be placed in position shown on image.

Gap spacers placement

To increase gap width place additional spacer tabs 5 mm in position as below.

1

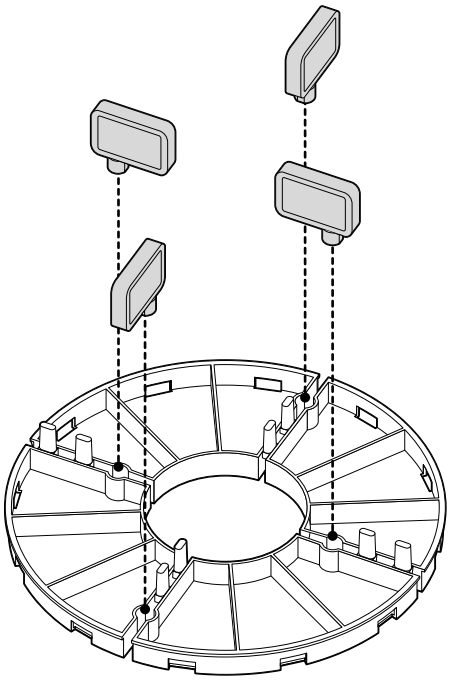

2

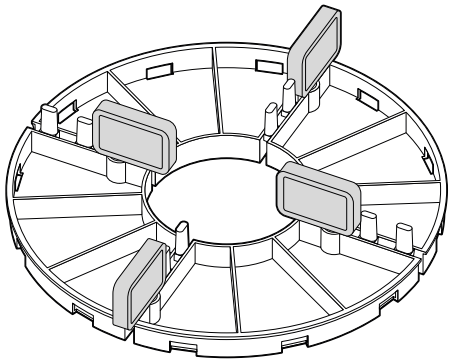

FIXED HEIGHT SUPPORT PAD 10 MM / 15 MM RUBBER SHIMS

Rubber shims for usage with Fixed Height Support Pad 16 mm.

The Fixed height support pad 16 mm has its dedicated rubber shim.

1

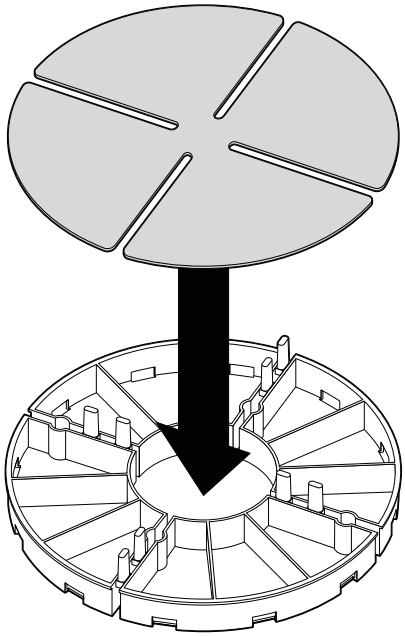

2

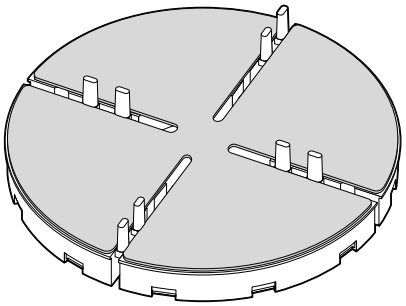

Noise reduction

Rubber shims reduce noises and sand grains sound which stay between pad and tile.

Dividing rubber shims into pieces.

Rubber shims can be divided in pieces. Each quarter can be used to reduce differences between tiles thickness. You can cut it by hand or scissors. Additional usage for noise reduction etc. is also possible.

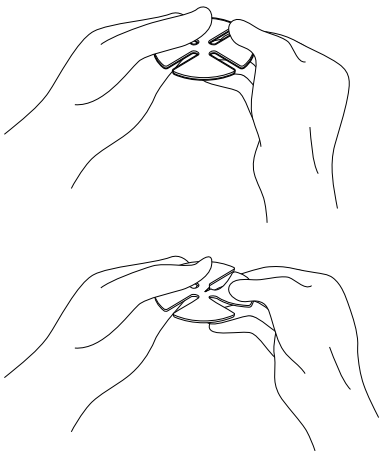

You can also use scissors to cut shim.

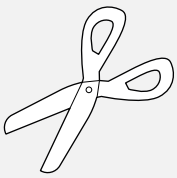

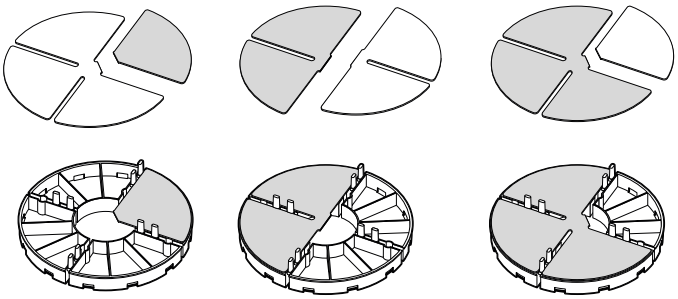

FIXED HEIGHT SUPPORT PAD 10 MM / 15 MM STACKABLE

Stacking Fixed Height Support Pads

Support Pads can be stacked on each other. To achieve height 32 mm connect 2 parts. Gap spacers must be placed in correct position.

1

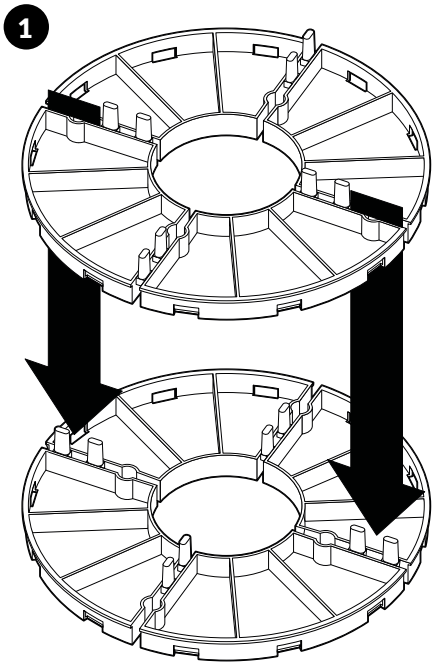

2

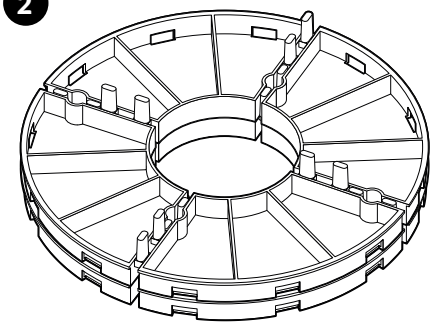

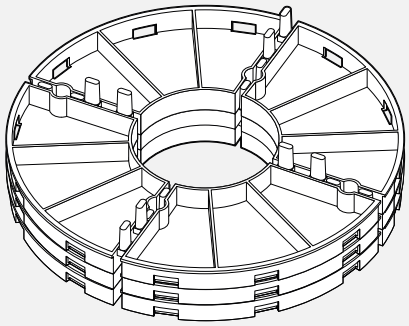

Max 3 pcs.

We suggest to not stacking more than 3 pcs. of support pads (48 mm).

FIXED HEIGHT SUPPORT PAD 8 MM

DESCRIPTION

Fixed height support pads 8 mm.

Fixed height support pads 10 mm / 15 mm for tiles. Support pads can be used for external ventilated terraces. Tiles made of concrete, pressed concrete, ceramic, stone, marble, granite etc. Terraces will have same slope as the terrace basis. For installation there is no need of any specialistic tools or materials as needed with traditional terraces glued on plaster. Elastic material which is made support pad 8 mm allows to not use rubber shims for noise reduction.

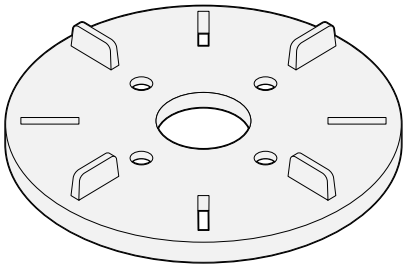

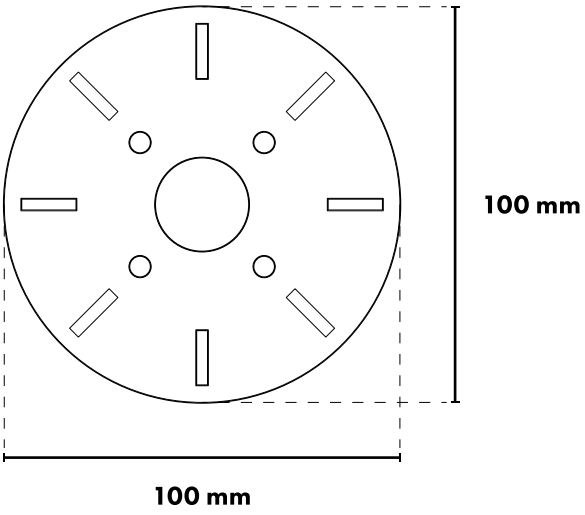

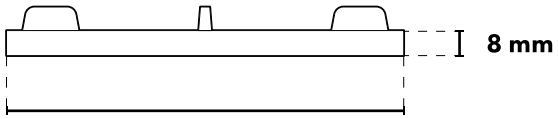

Technical data

Size:
Diameter: 100 mm
Height: 8 mm

Material: PP/TPE

Weight performance: 1000 kg

Temperature tolerance: x

Built in spacer tabs: 3mm

Modular: No

Height regulation: Yes, stackable and rubber shims.

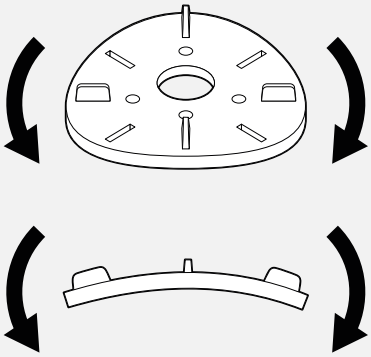



Additional noise reduction

Elastic material which is made support pad 8 mm allows to not use rubber shims for noise reduction.

FIXED HEIGHT SUPPORT PAD 8 MM GAP SPACERS

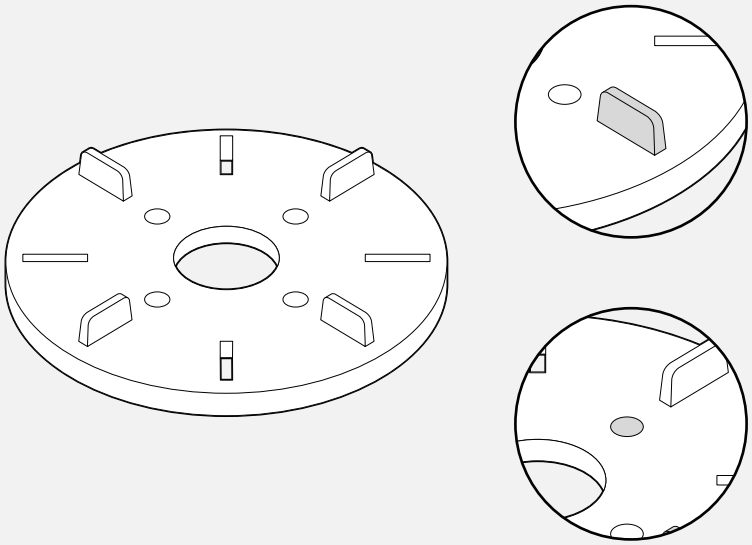

Built in gap spacer 3 mm

Support pads contain built in gap spacer tabs 3 mm.

External spacer tabs 5 mm

Additional gap spacer tabs 5 mm can be placed in position shown on image.

Gap spacers placement

To increase gap width place additional spacer tabs 5 mm in position as below.

1

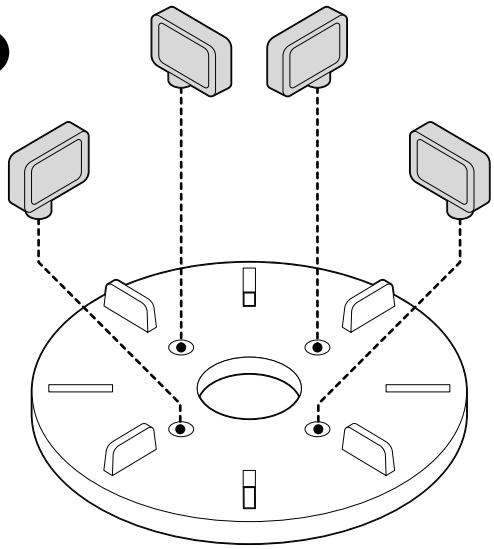

2

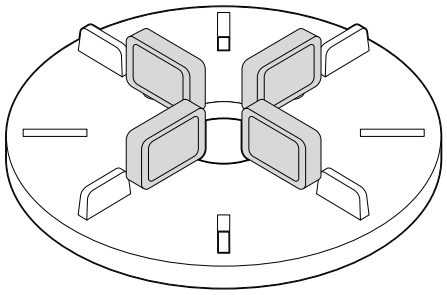

FIXED HEIGHT SUPPORT PAD 8 MM

RUBBER SHIMS

Rubber shims for usage with Fixed Height Support Pad 8 mm.

The Fixed height support pad 8 mm can be used with rubber shim SH.

1

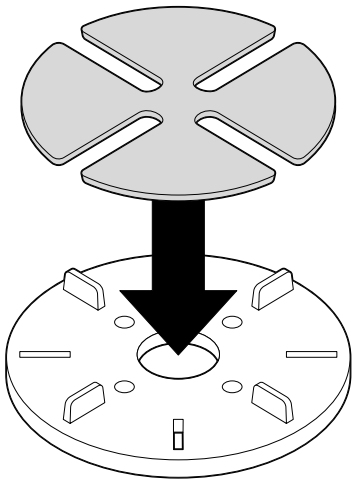

2

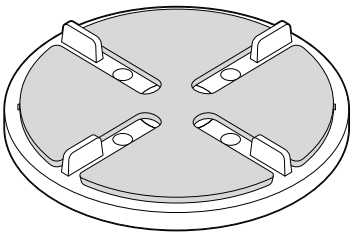



Noise reduction

Rubber shims reduce noises and sand grains sound which stay between pad and tile.

Dividing rubber shims into pieces.

Rubber shims can be divided in pieces. Each quarter can be used to reduce differences between tiles thickness. You can cut it by hand or scissors. Additional usage for noise reduction etc. is also possible.

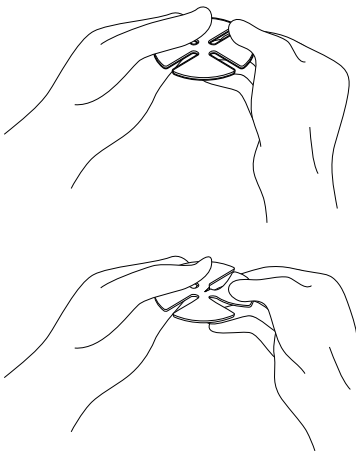

You can also use scissors to cut shim.

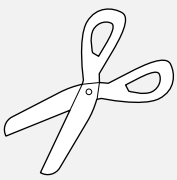

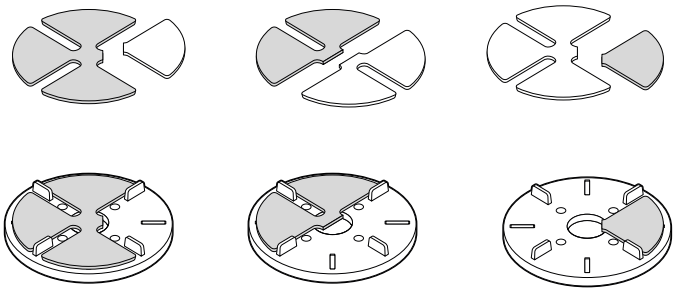

FIXED HEIGHT SUPPORT PAD 8 MM STACKABLE

Stacking Fixed Height Support Pads

Support Pads can be stacked on each other. To achieve height 16 mm connect 2 parts. Gap spacers must be placed in correct position.

1

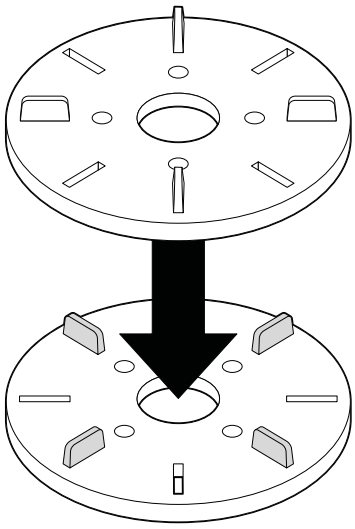

2

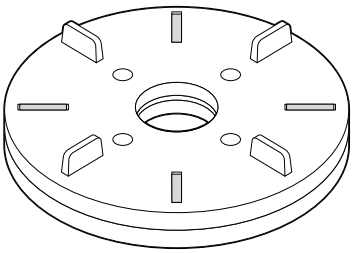

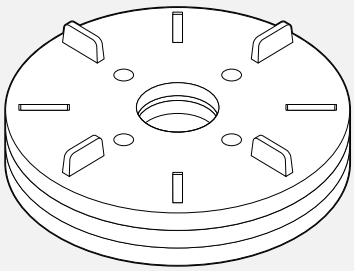

Max 3 pcs.

We suggest to not stacking more than 3 pcs. of support pads (24 mm).

ADJUSTABLE HEIGHT PEDESTALS 30-420 MM

DESCRIPTION

Adjustable height pedestal

Standard adjustable height pedestals with height regulation range from 30 mm to 220 mm. Consists of base, screw ring, head screw, gap spacer tabs. Adjustable height pedestals allows for smooth height regulation of terrace. The size of the base makes pedestals and terrace stable. Adjustable height pedestals are durable for weights and loads. All terrace construction is long lasting.

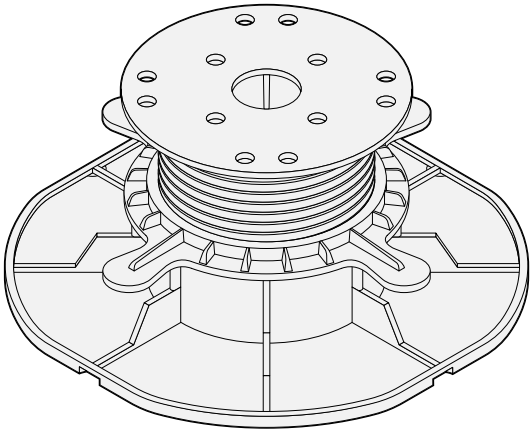

Technical data

Sizes:
Base diameter: 168 mm
Wysokość: 30-220 mm
Screw diameter: 75 mm
Head diameter : 100 mm

Material: PP

Weight resistance:
400 kg

Elements:
Base, screw ring, screw head, gap spacer tabs.

Height regulation:
- height is regulate by turning screw ring
- height extensions available DS 100 mm

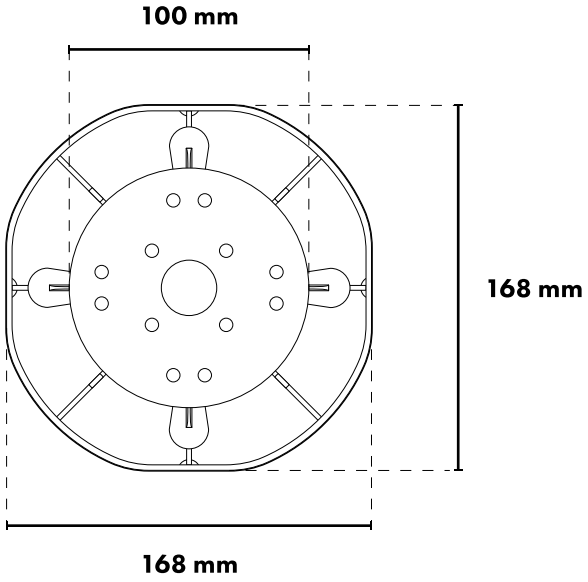

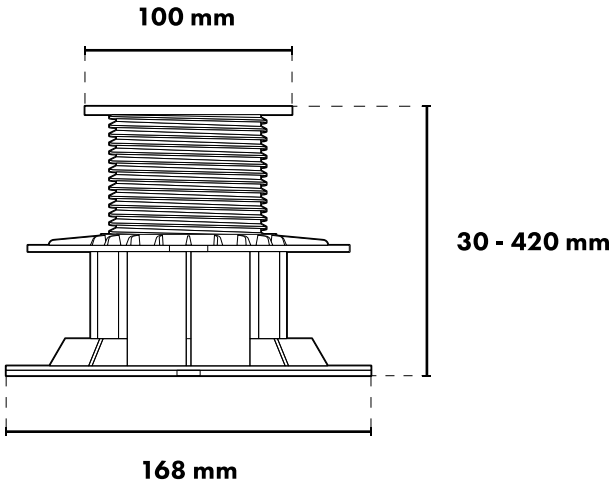

ADJUSTABLE HEIGHT PEDESTALS 30-420 MM

ASSEMBLE

Assemble with self leveling head

Drawing presents assemblance of pedestal with self leveling head.

Standard assemble

Drawing presents pedestal with standard elements.
From up to down:
- Gap spacer tabs
- Screw head
- Screw ring
- Base

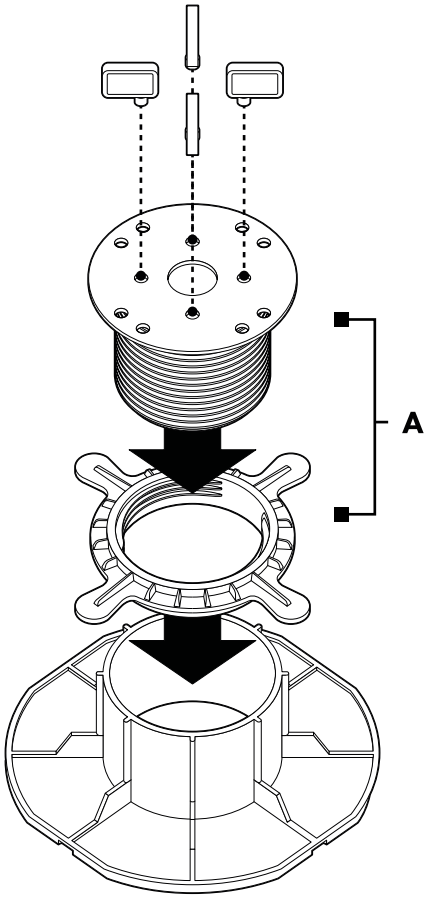

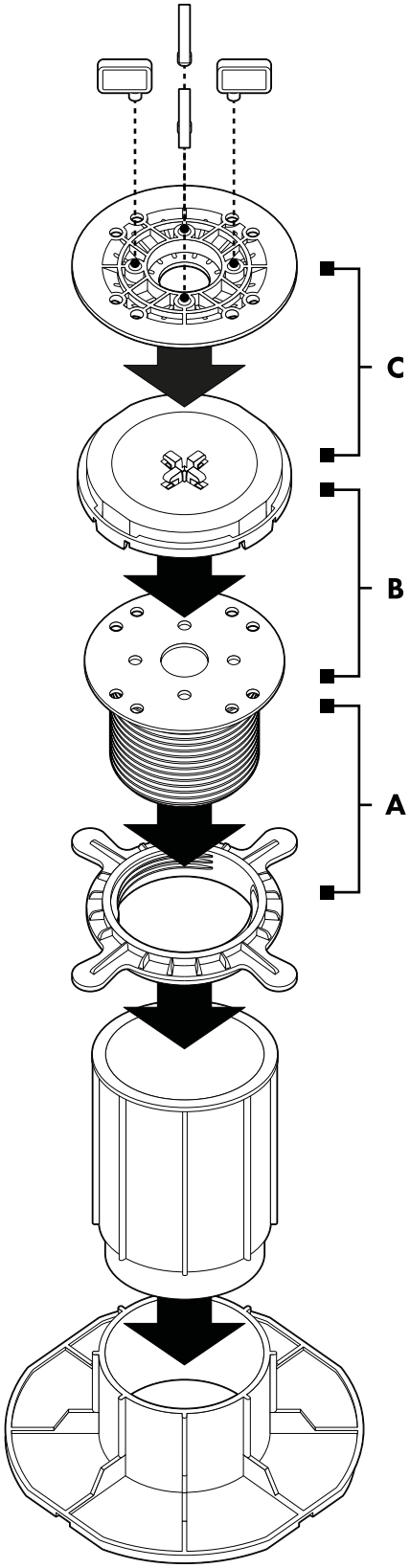

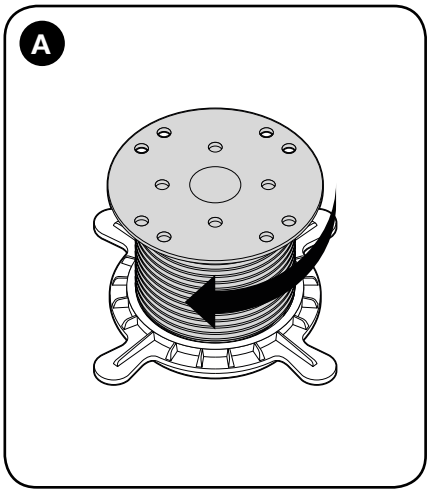

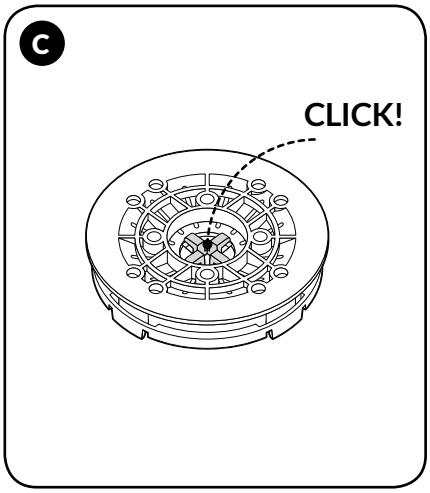

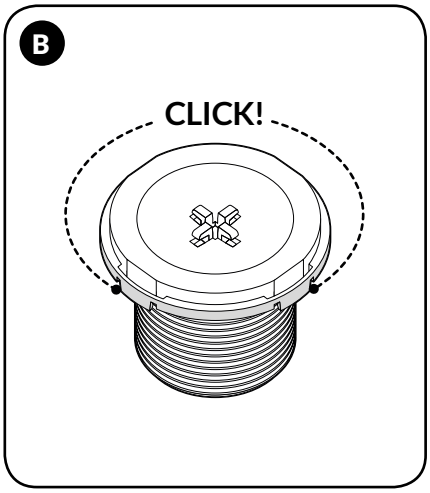

ADJUSTABLE HEIGHT PEDESTALS 30-420 MM

GAP SPACERS

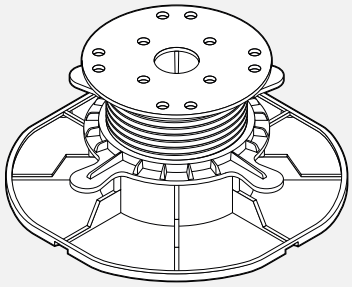

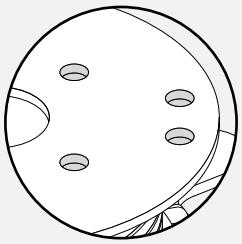

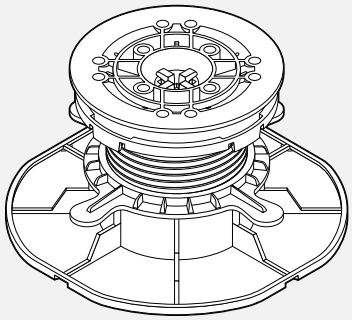

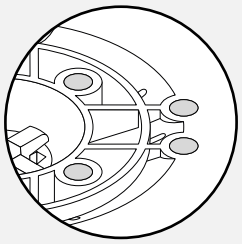

Gap spacer tabs mount holes

In head of the pedestal are holes where gap spacer tabs can be places. Location of these allow to set wide variety setup.

Gap spacer tab - standard placement

Place gap spacer tabs in head holes.

1

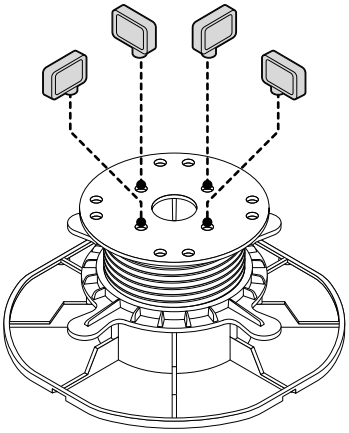

2

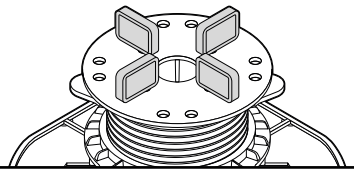

Gap spacer tabs - placement with self levelling head.

Place gap spacer tabs in self leveling head holes.

A

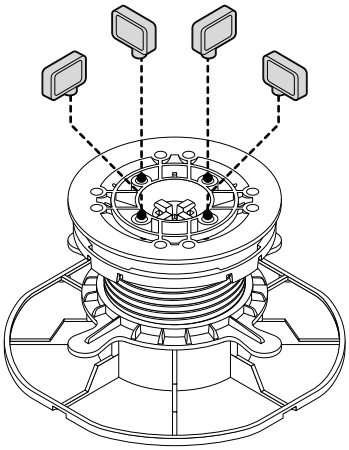

B

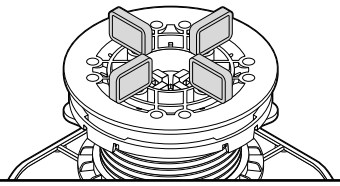

ADJUSTABLE HEIGHT PEDESTALS 30-420 MM

JOIST ADAPTER

Joist adapter

Insert joist adapter into holes in pedestal head.

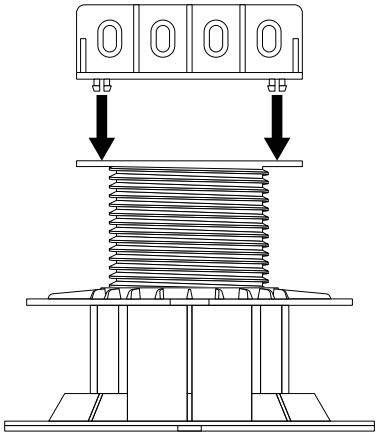

Screw - joist adapter

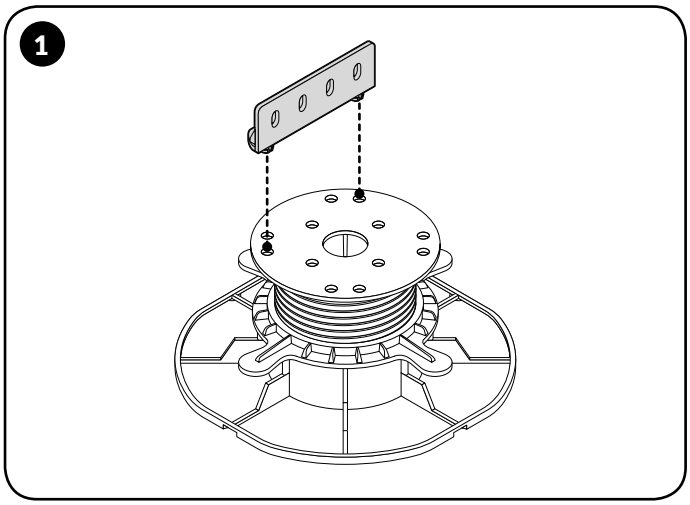

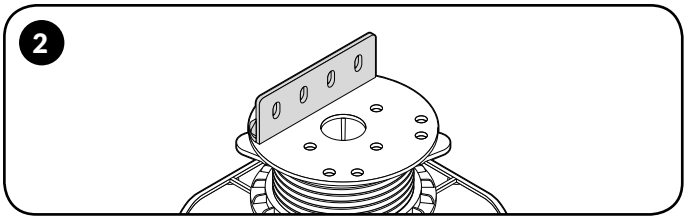

Self leveling head - joist adapter

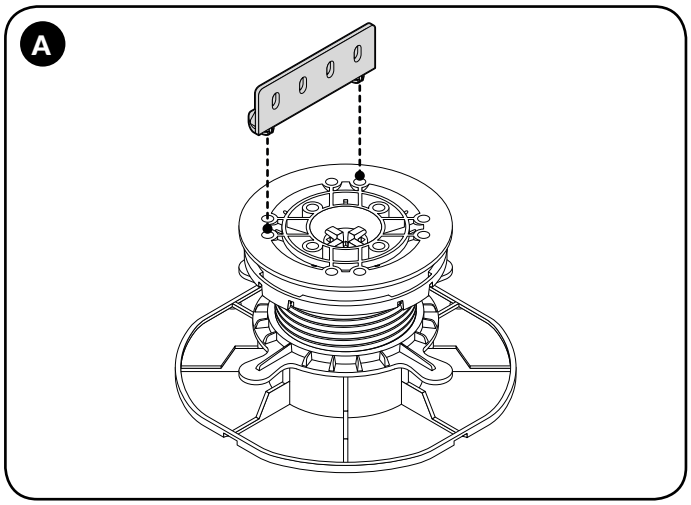

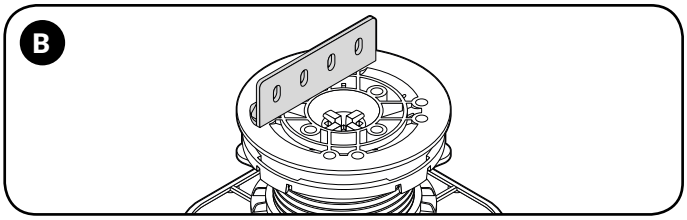

ADJUSTABLE HEIGHT PEDESTALS 30-420 MM
RUBBER SHIMS

Rubber shims to use with adjustable height pedestals.

Rubber shims can be used with adjustable height pedestals and also with self leveling heads.

1

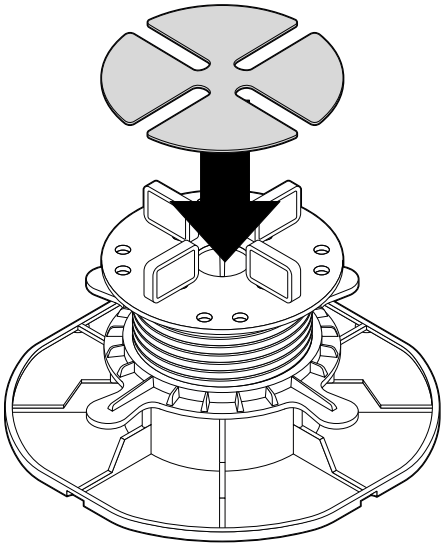

2

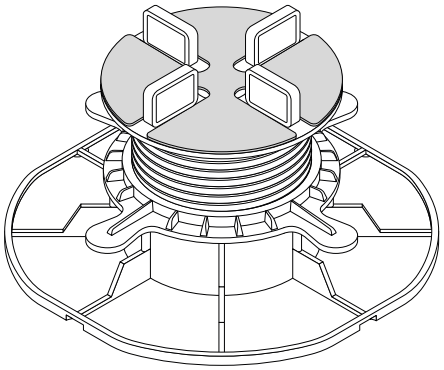



Noise reduction

Rubber shims reduce noises and sand grains sound which stay between pad and tile.

Dividing rubber shims into pieces.

Rubber shims can be divided in pieces. Each quarter can be used to reduce differences between tiles thickness. You can cut it by hand or scissors. Additional usage for noise reduction etc. is also possible.

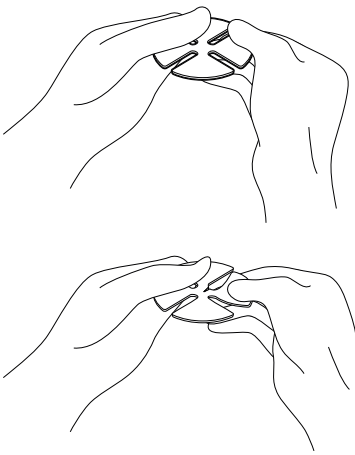

You can also use scissors to cut shim.

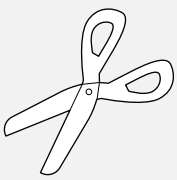

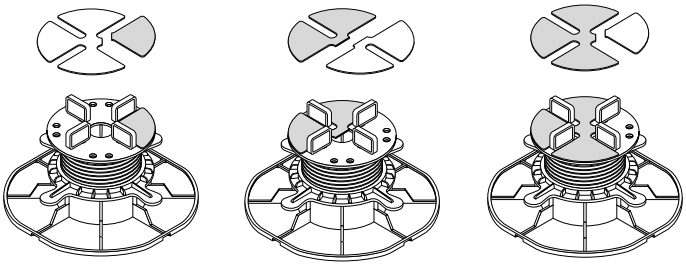

ADJUSTABLE HEIGHT PEDESTALS 30-420 MM
SELF LEVELING HEAD

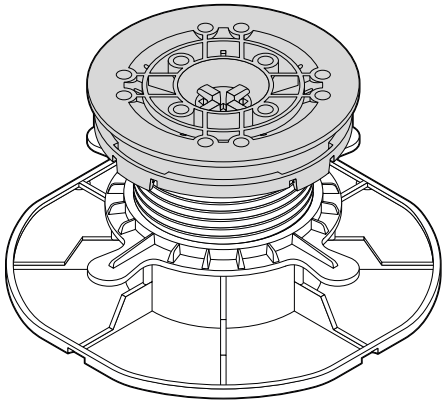

Self leveling head

Self leveling head for slope reduction consists of two elements - lower and upper. Lower part is set on the pedestals head and upper is put on the lower part. Self leveling heads allow to level terraces with slopes up to 7%. Self leveling head automatically adjust top terrace level.

Self leveling head angle

Adjustable pedestals with self leveling head can be used on the terraces with up to 7% slope on basis.

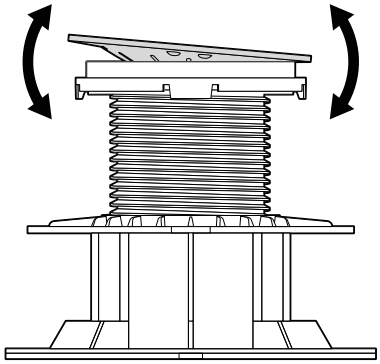

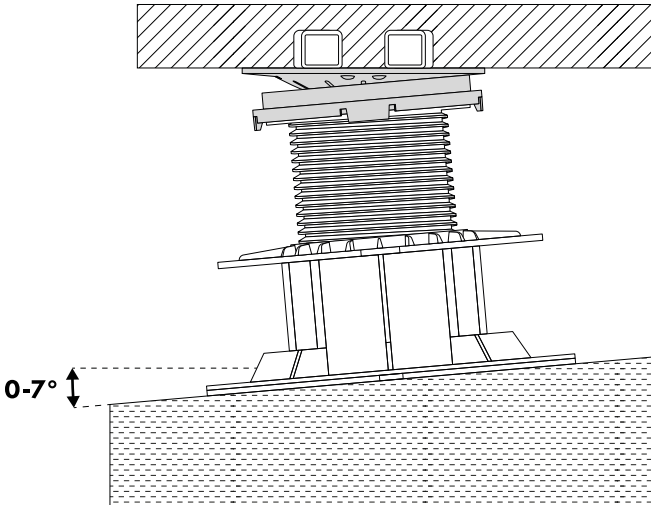

Sloped foundation

Adjustable height pedestals with self leveling heads allow to level terraces on sloped foundation up to 7% angle.

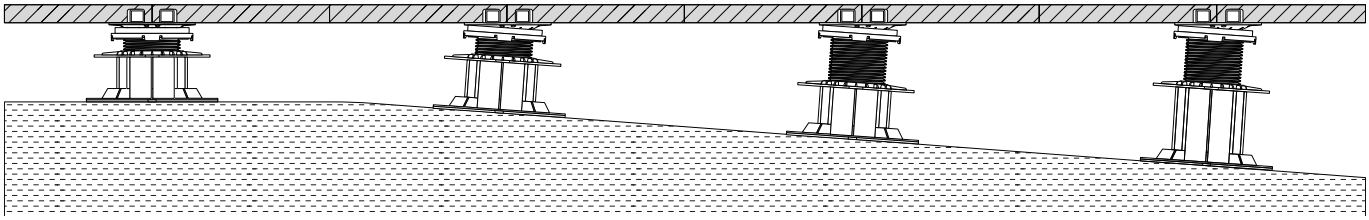

ADJUSTABLE HEIGHT PEDESTALS 30-420 MM

HEIGHT REGULATION - SCREW RING

Height regulation

Height of the pedetsals is regulated by turning around screw ring.

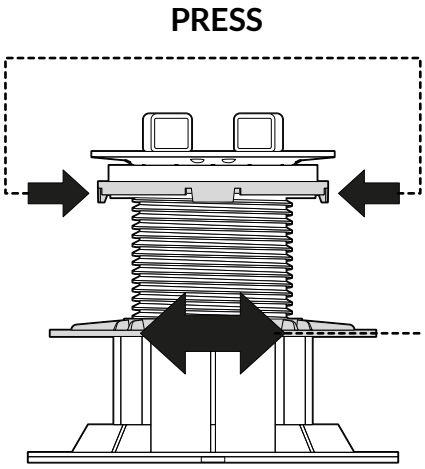

Height lowering

To lower pedestal height turn screw ring right and adjust demanded height. Note that when using self leveling head You need to push fingers on the lower part of it to oppose rotation.

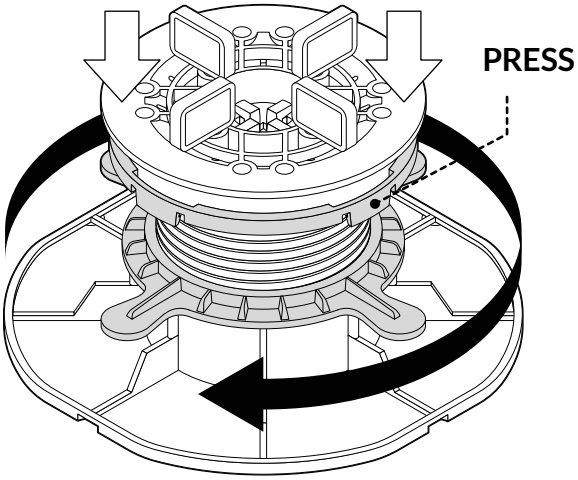

Height raise

To raisepedestal height turn screw ring leftand adjust demanded height. Note that when using self leveling head You need to push fingers on the lower part of it to oppose rotation.

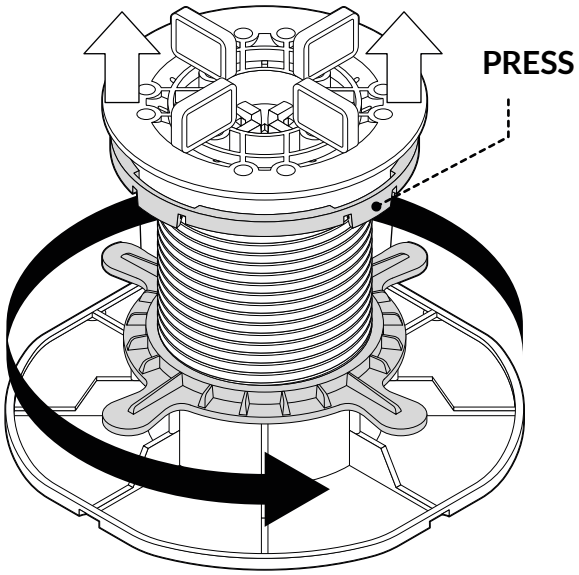

ADJUSTABLE HEIGHT PEDESTALS 30-420 MM

HEIGHT EXTENSION - COUPLERS

Height extension

If height neede to be higher than 220 mm use height coupler DS by placing it in pedetal base. It will raise pedestal height range for additional 100 mm.

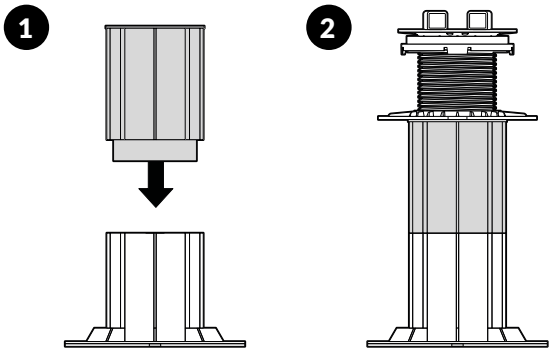

Maximum height

Recommended maximum height of the pedestal is 420 mm. To achieve this height use two height couplers.

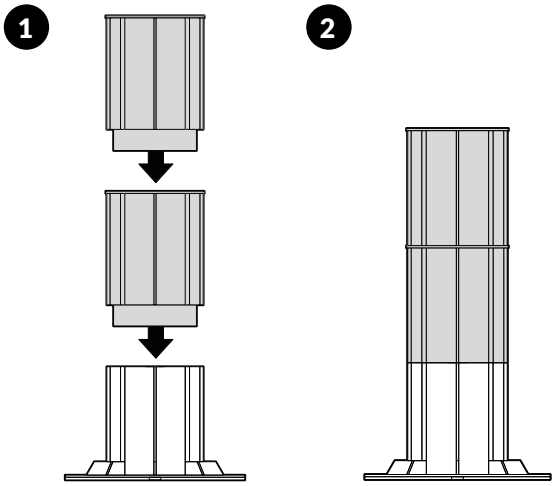

Additional height

If needed to achieve higher than recommended height 420 mm You can put additionaly PVC pipe inside to pedestal base and height couples - as on the drawing.

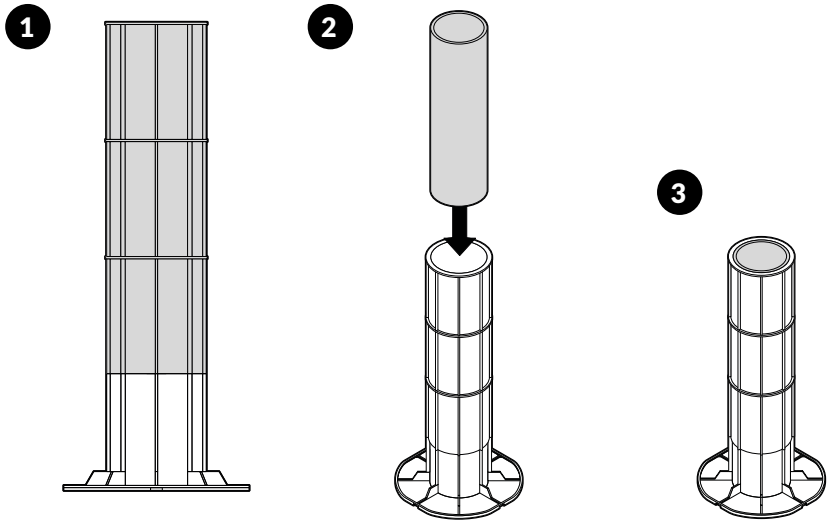

SBR RUBBER PAD 200X200X3 MM

SBR Rubber Isolation Pad

SBR Rubber Isolation Pads to use between pedestal base and terrace foundation. We always recommend to use SBR Rubber Isolation Pads to avoid layers vulcanize or water isolation damage. SBR Rubber Isolation Pads additionaly mute nouses when using the terrace what raise the overall comfort of usage. The material which are pads made is fully water and external wheather conditions resistant. Small visible difraction of the terrace is possible when walking.

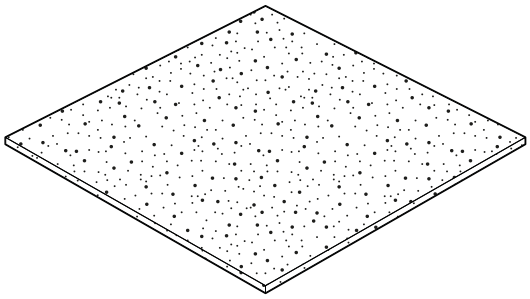

Technical data

Size:
Width/Length: 200 mm
Thickness: 3, 5, 8, 10 mm

Material: SBR, polyurethane glue

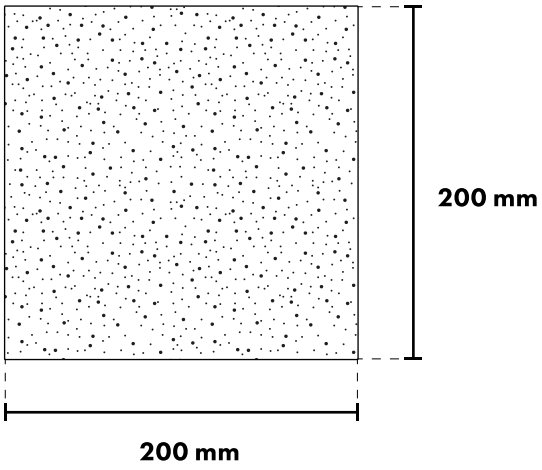

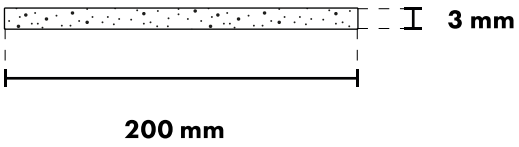

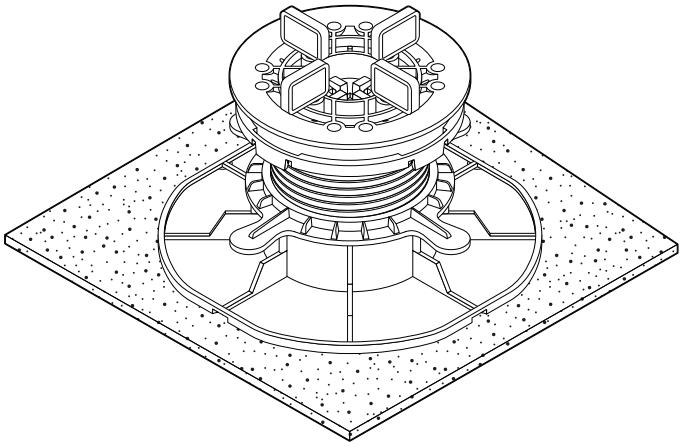

Noise reduction

SBR Rubber Isolation Pads additionaly mute terrace when using what raise the overall comfort of usage.

POSITIONING OF GAP SPACERS

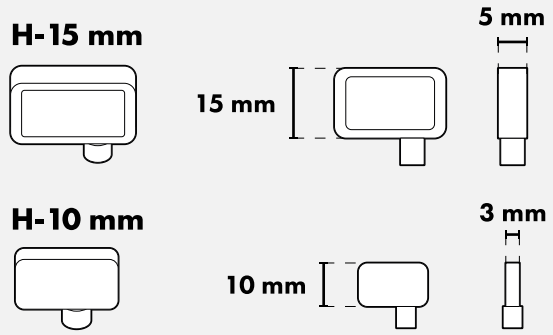

Gap spacer tabs are used to set gap between tiles or mount and position decking joist on the pedestal head. Available gaps width is 3 and 5 mm. Multiple holes on the pedestal head allows to combine gaps spacer tabs position. Despite standard cross position gap spacer tabs can be mount parrarely for decking joist mount. Available joist sizes - 2,5 cm, 3,8 cm, 4 cm, 5 cm, 6 cm, 7 cm.

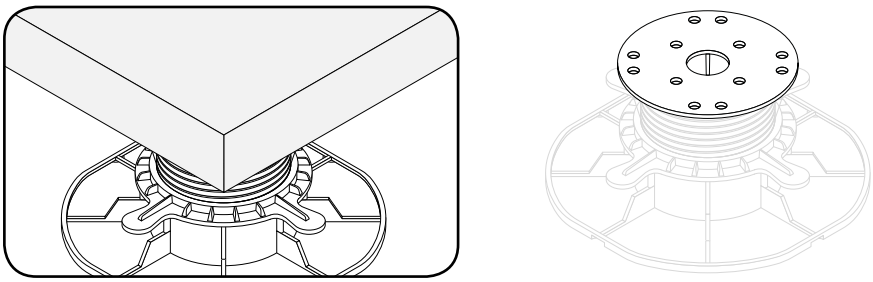

Underneath

Gap spacers tabs position to place pedestal underneath tile.

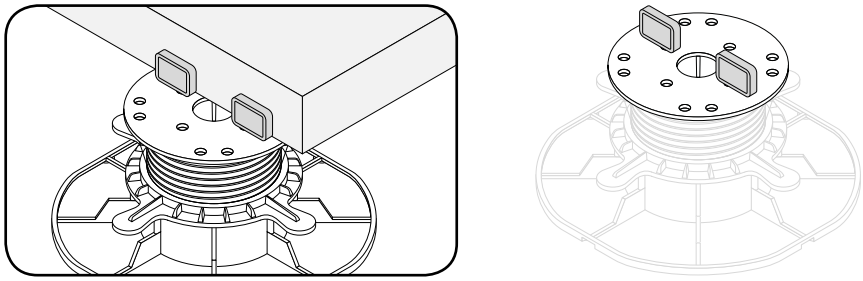

Along the wall

Gap spacers tabs position to place pedestals next to wall.

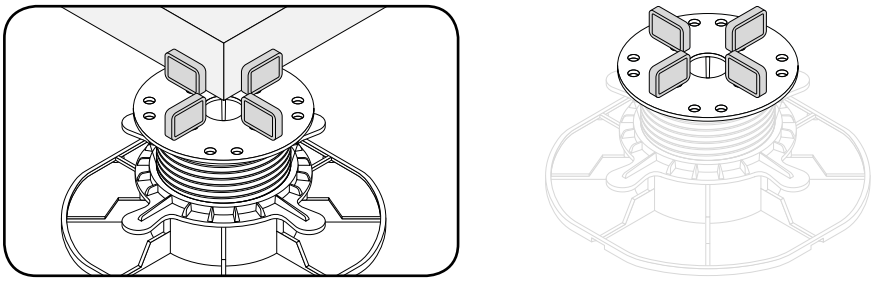

Tile corners

Gap spacers tabs position to support tiles corners.

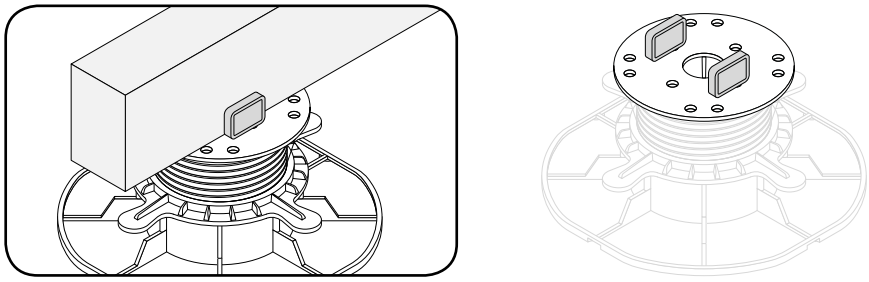

Decking joists

Gap spacers tabs position to mount decking joist.

STEEL CLIPS

Facia boards clip - upper

Facia board clip - upper used to mount on the head of the pedestal and hold vertical closure tile.

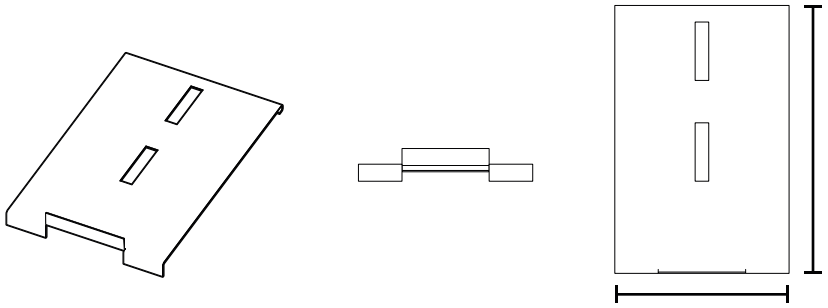

Technical data

Size:
Width: 100 mm
Length: 150 mm
Thickness: 0,7 mm

Material:
stainless steel

Facia boards clip - lower

Facia board clip - lower used to mount under pedestal base and hold vertical closure tile.

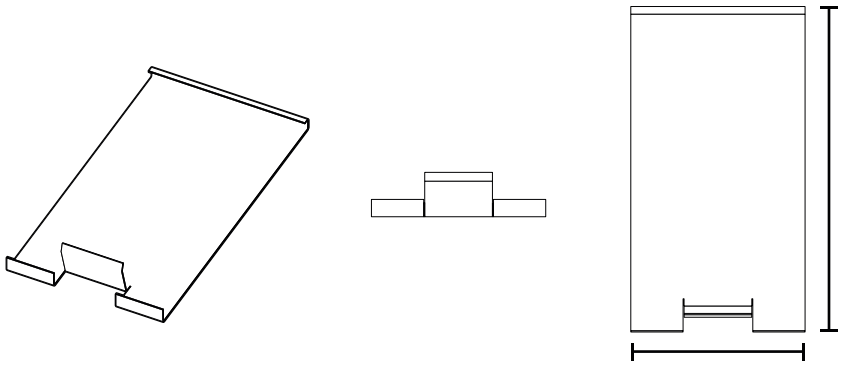

Technical data

Size:
Width: 100 mm
Length: 183 mm
Thickness: 0,7 mm

Material:
stainless steel

Wall edge clip

Up to wall clip is used to set gap between tiles and terrace limitation e.g. wall.

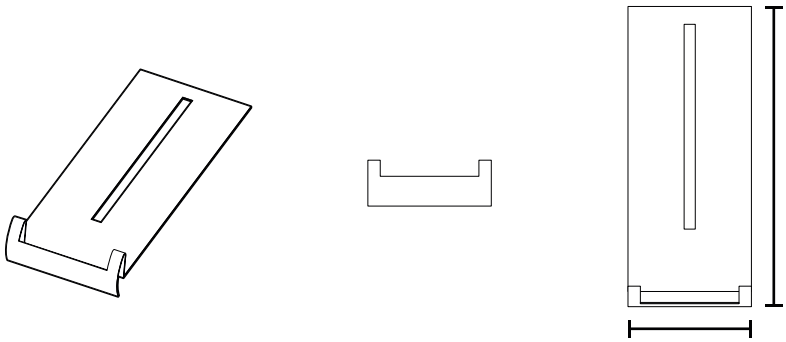

Technical data

Size:
Width: 70mm
Length: 162 mm
Thickness: 0,7 mm

Material:
stainless steel

FACIA BOARD COVERING

FACIA BOARDS PREPARATION

Tools:

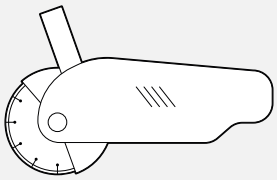

Grinder



Pencil

1

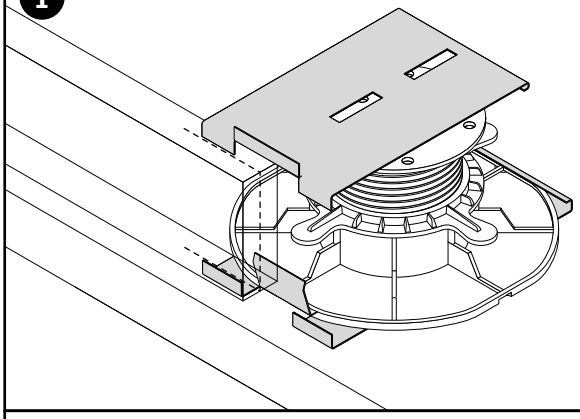

1. Measure and mark with pencil linses where clips upper and lower will be inserted.

2

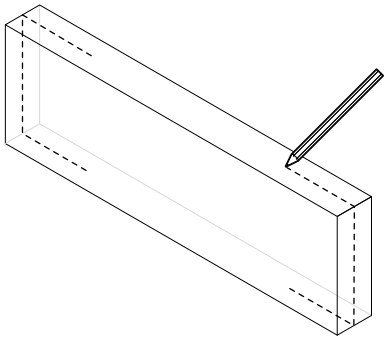

2. Marked all points where clips will be mounted.

3

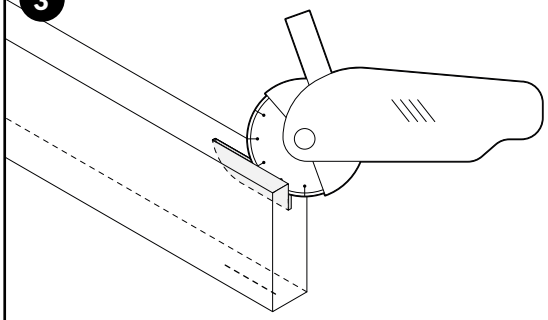

3. Cut chinks with grinder. The depth of cut must be identical as clips.

4

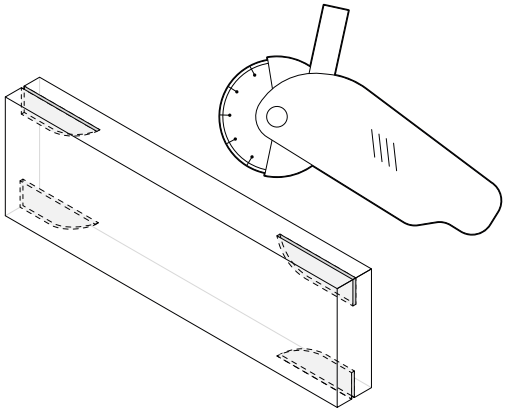

4. Cut all places on the vertical closure tile.

5

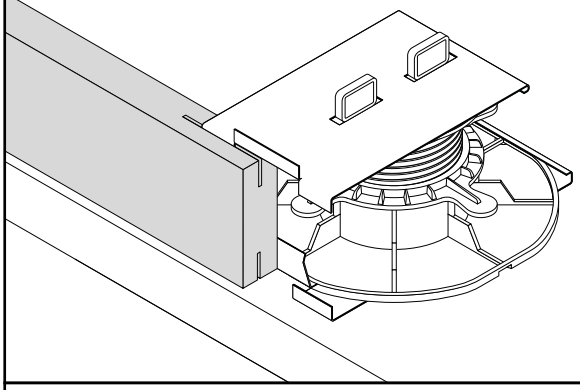

5. Place vertical tile on the clips with the pedestal.

FACIA BOARD COVERING
OUTER TILES PREPARATION

Tools:

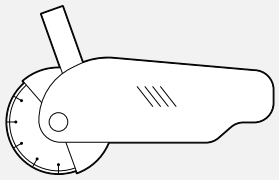

Grinder

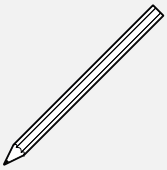

Pencil

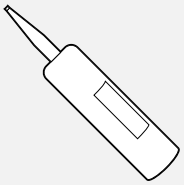

Glue

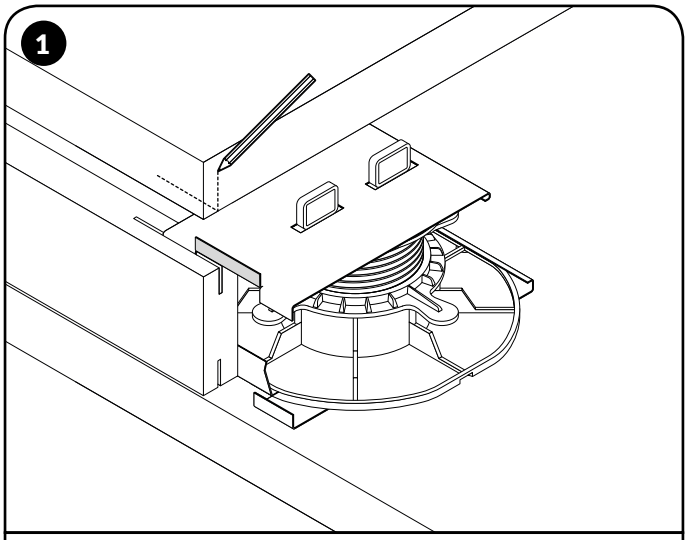

1. Measure and mark with pencil linses where clips upper and lower will be inserted.

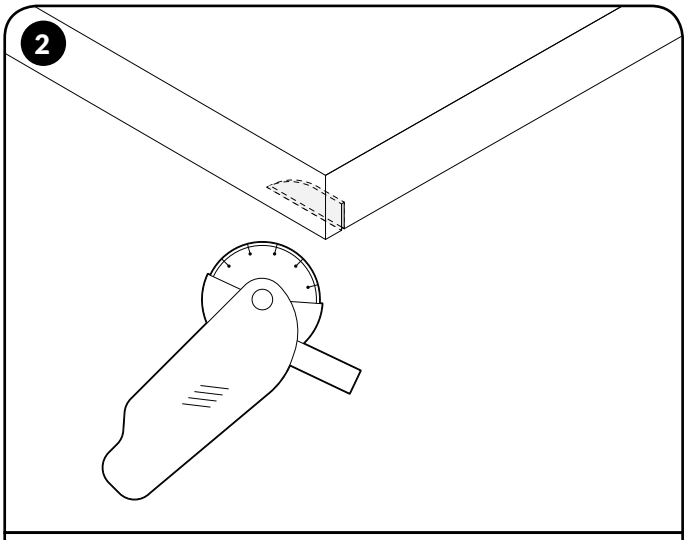

2. Cut chink with grinder. The depth of cut must be identical as clips.

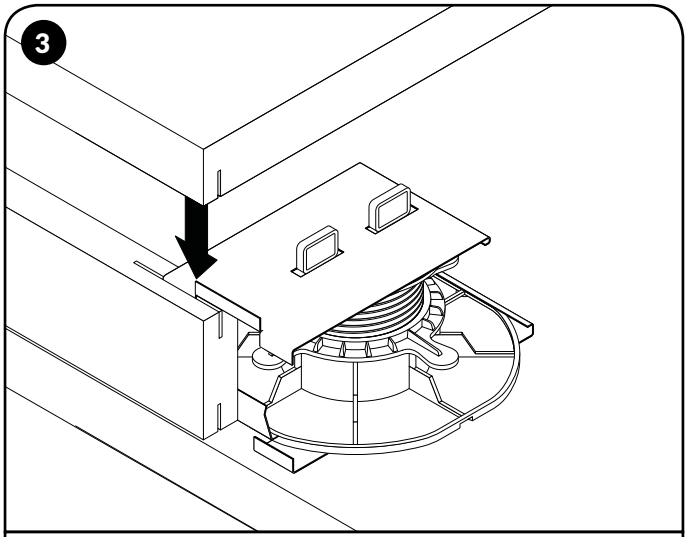

3. Place top tile on the clip in the hole.

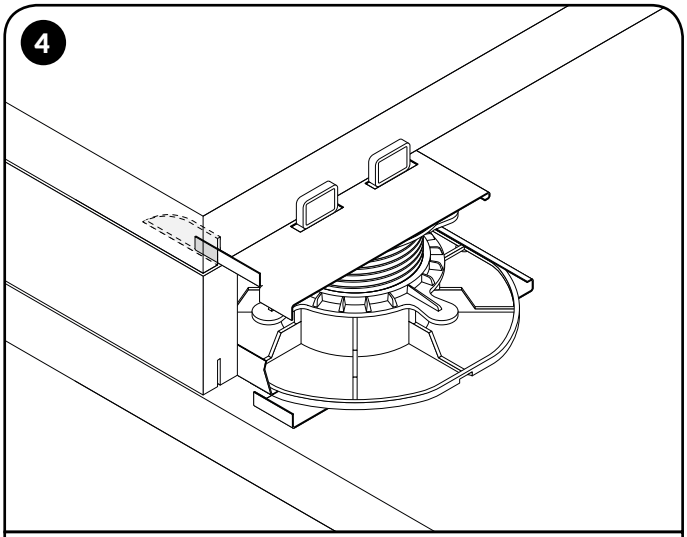

4. Top tile should not outstand or draw back vertical tile.

FACIA BOARD COVERING

FACIA BOARD CLIPS ASSEMBLANCE

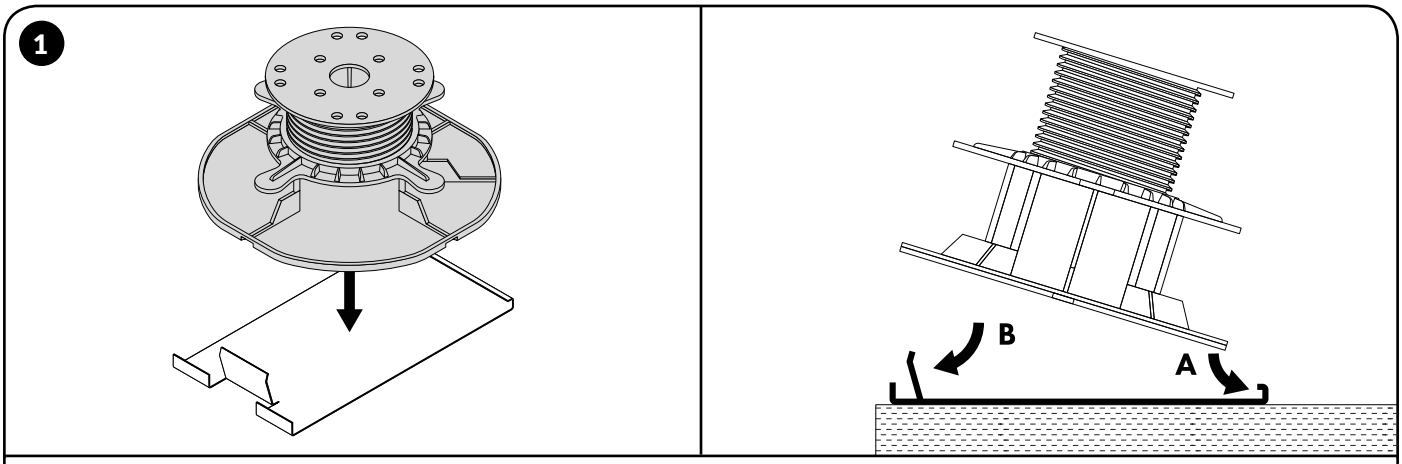

1. Place pedestal on the lower clip. First hook base into clip angulation. Pedestal must stay flat.

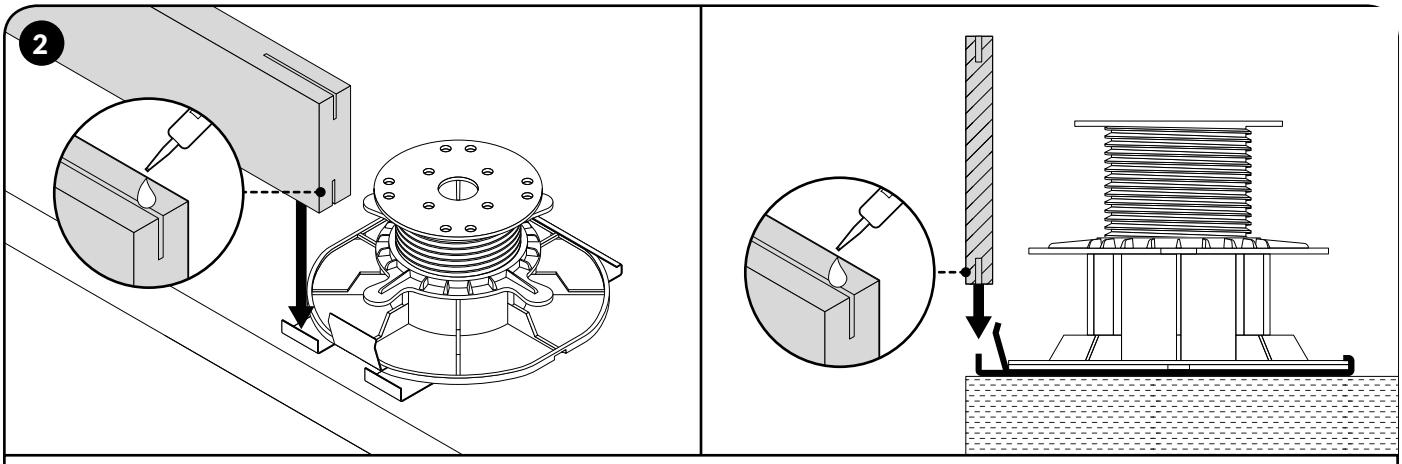

2. Apply the glue. Place vertical tile onto lower clip detent.

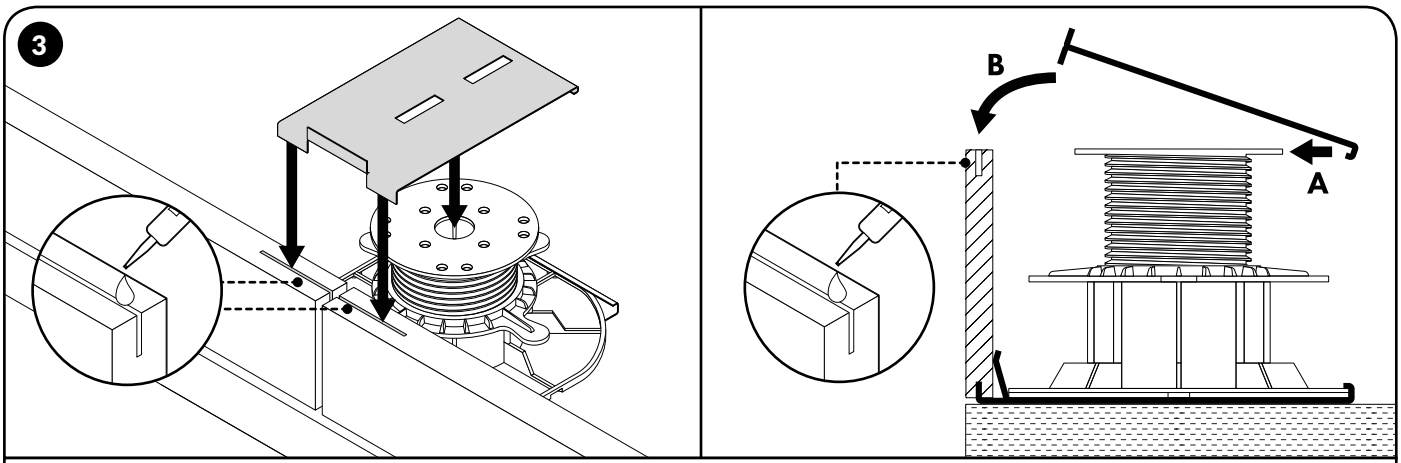

3. Apply the glue. Place upper clip onto pedestal head and cut in the tile. Hook clip on the head as on the drawing.

FACIA BOARD COVERING

FACIA BOARD CLIPS ASSEMBLANCE

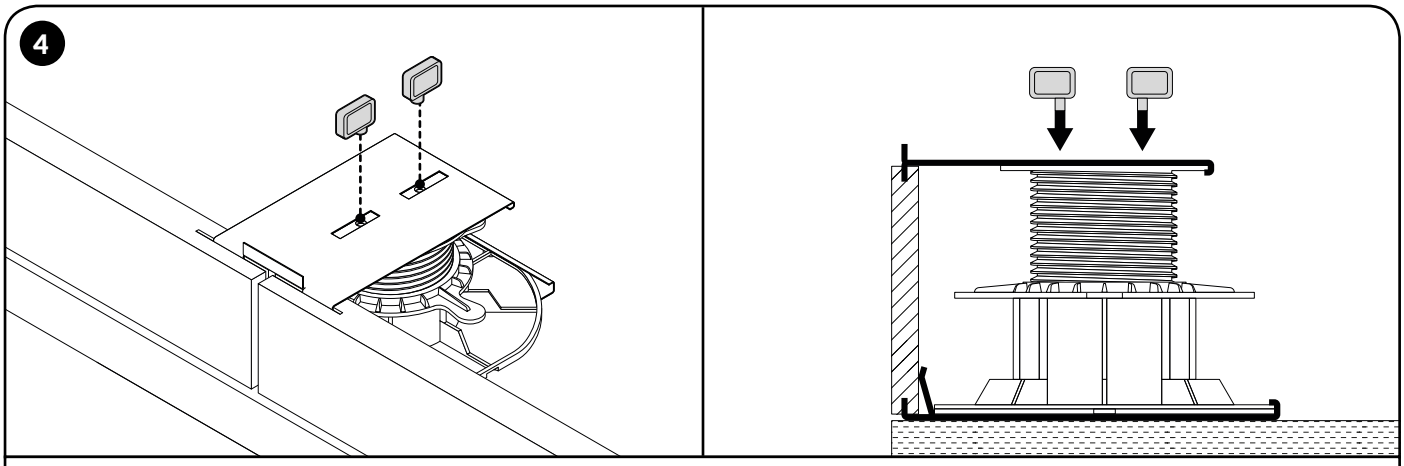

4. Place gap spacer tabs into pedestal head.

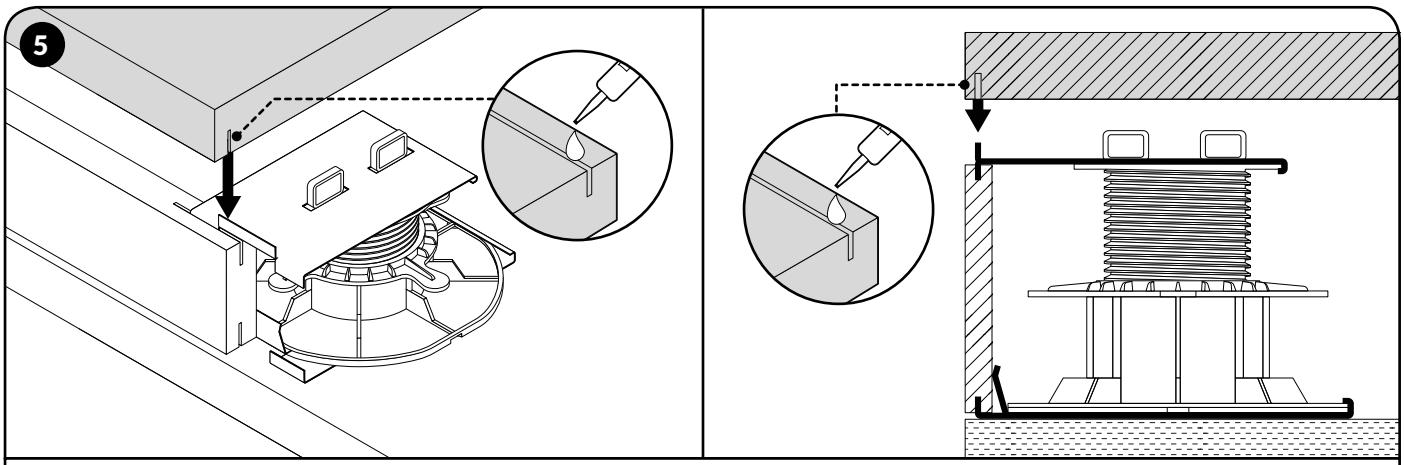

5. Apply the glue. Place top tile on to pedestal head and aim cut hole onto clip as on the drawing.

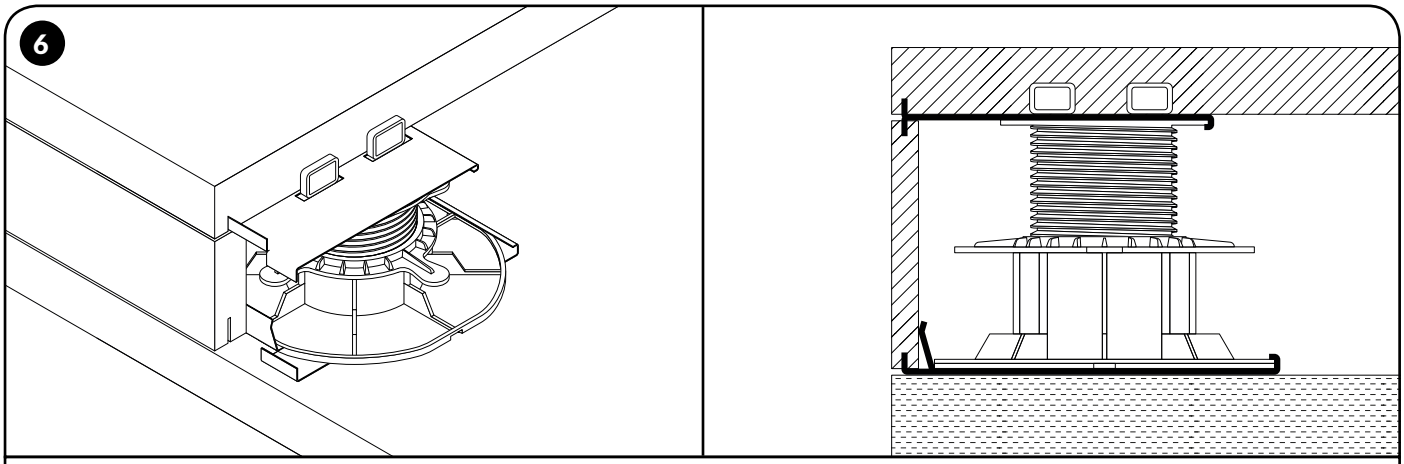

6. Drawing above shows correct mounted vertical closure tile.

SPACER EDGE CLIP

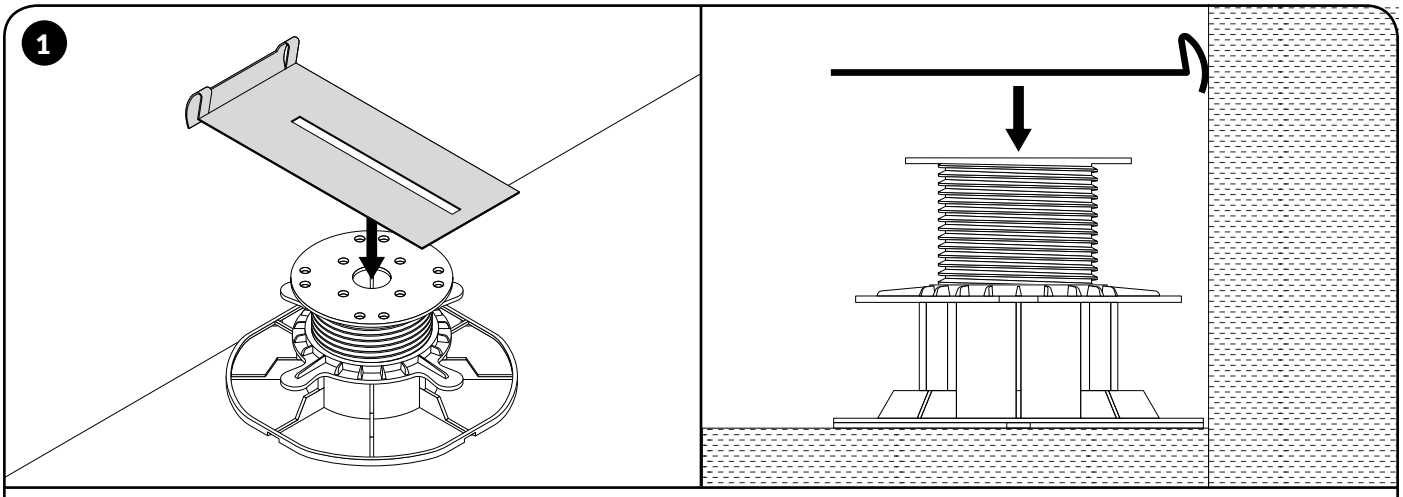

1. Place clip to the pedestal head.

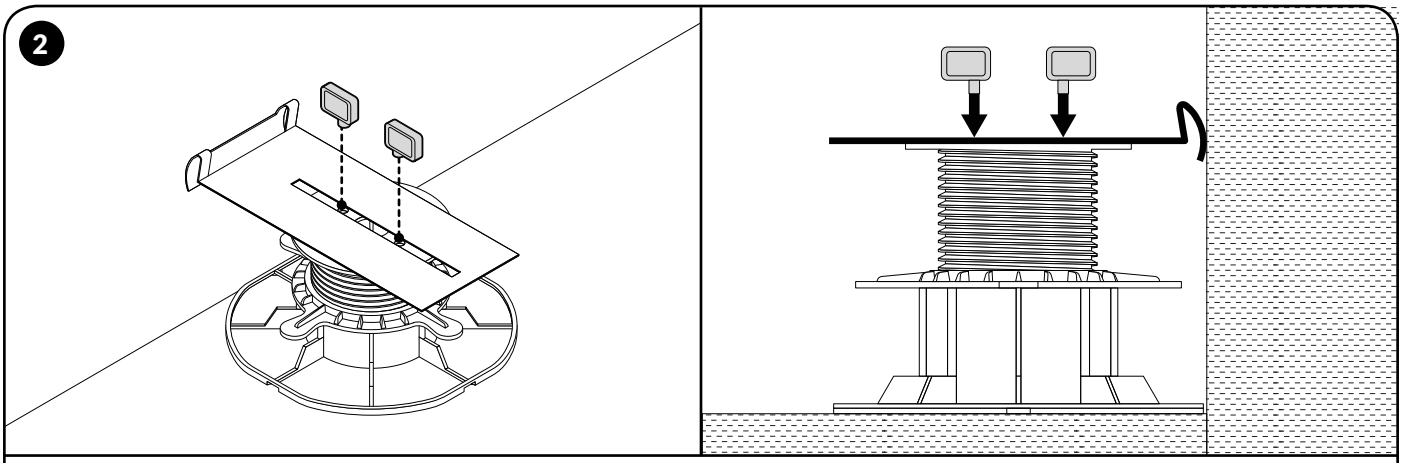

2. Place gap spacer tabs on the pedestal head.

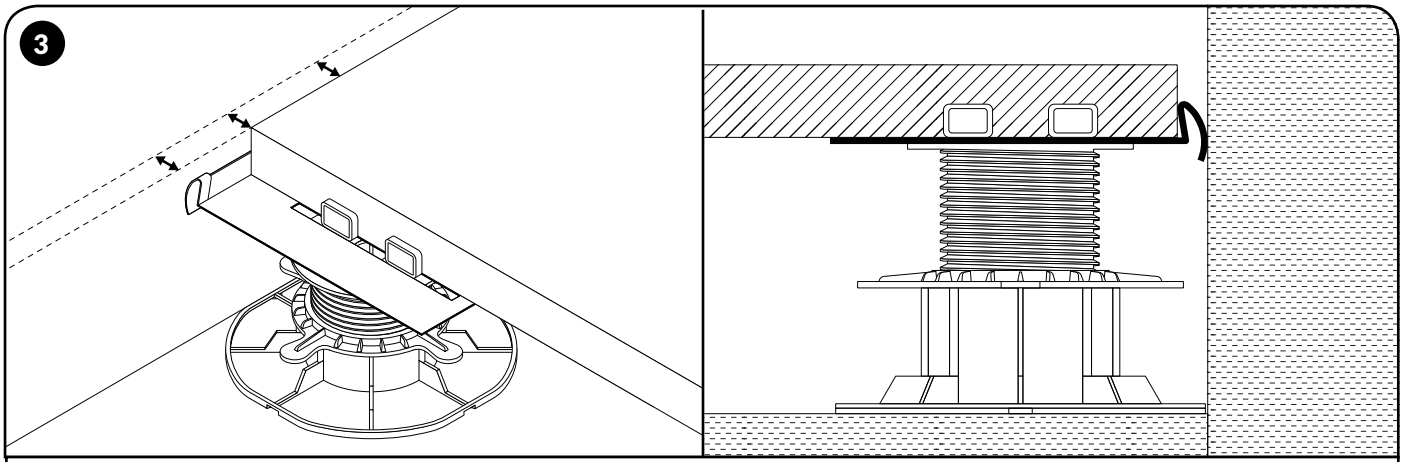

3. Place top tile on the pedestal head. Clip should make gap between tile and outer terrace limitation.

TILES THICKNESS DIFFERENCE

Rubber shims

Rubber shims are used to reduce thickness differences. In case of tiles thickness differences You need to verify the thicker tile and place rubber shims under the thinner tiles to get the same thickness.

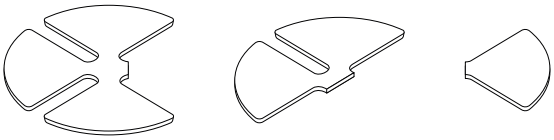

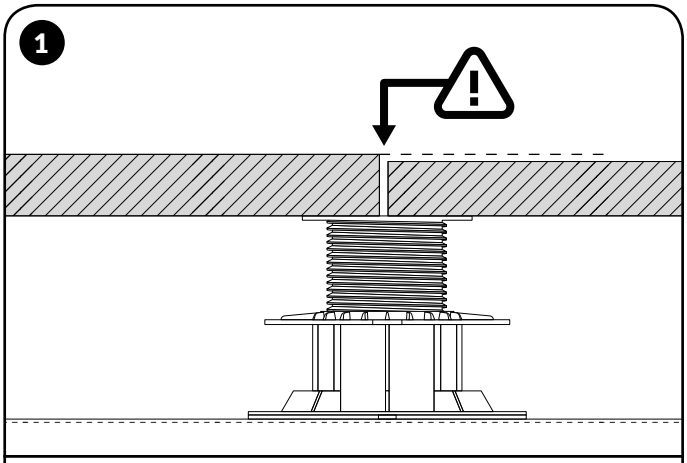

1. Measure tile thicknesses.

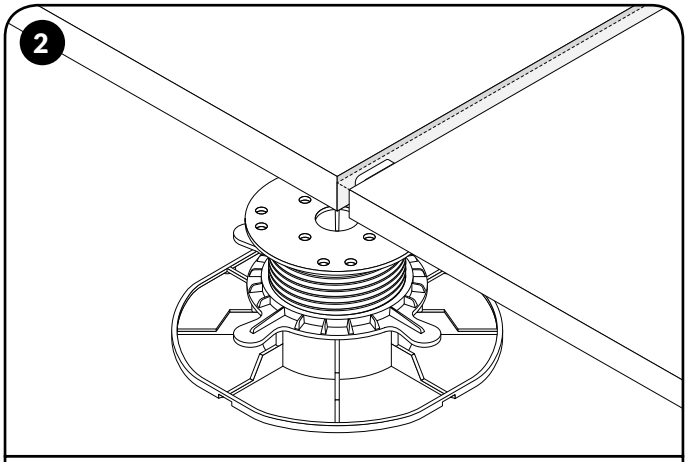

2. Verify thickness differences between tiles.

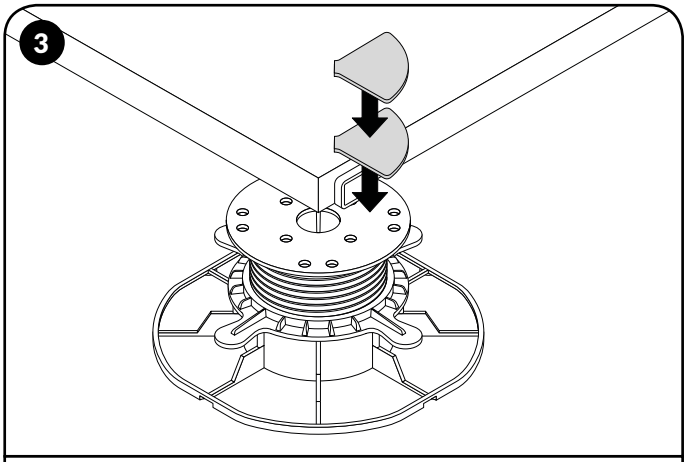

3. Place on the pedestal head demanded thickness rubber shims.

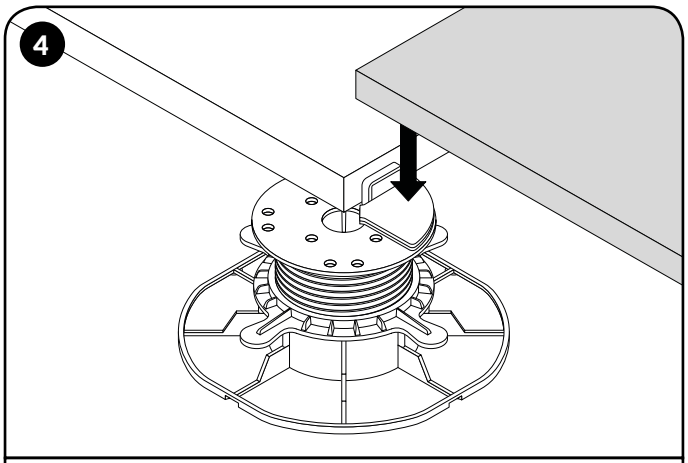

4. Place thinner tile on the placed before rubber shims.

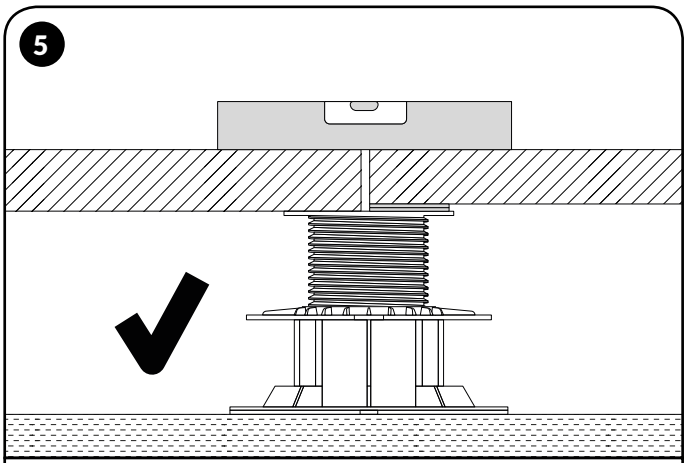

5. Correct placed terrace tiles should make flat surface of the terrace.

PEDESTALS WEIGHT PERFORMANCE

Acceptable weight load

Information on the permissible load on pedestals can be found in the detailed technical specifications - ask your supplier.

Temperature resistance

Pedestals keep its usage parametres with temperature range as below:

+60°C

-30°C

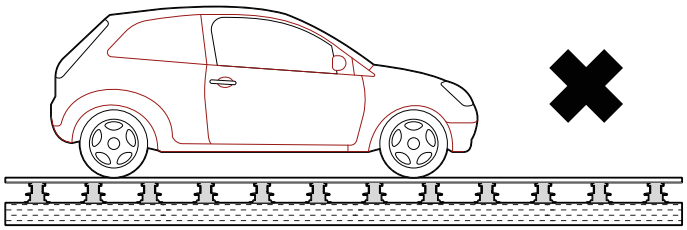

It is forbidden to drive any vehicle on the terrace.

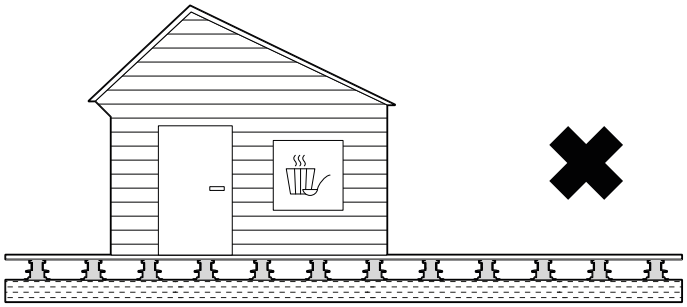

It is forbidden to place any heavy load object on the terrace.

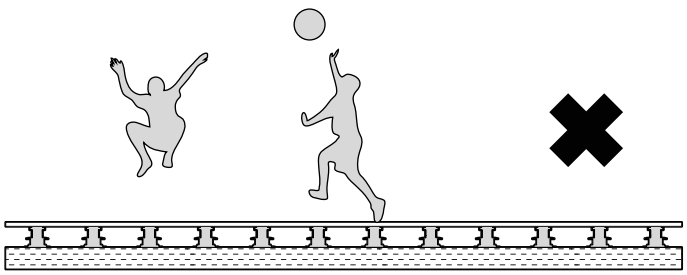

It is forbidden to jump or dance on the terrace.

IMPORTANT INFORMATION
PEDESTALS BASIS

Flat surface

The foundation on which pedestals are placed must be flat and gives pedestals stability.

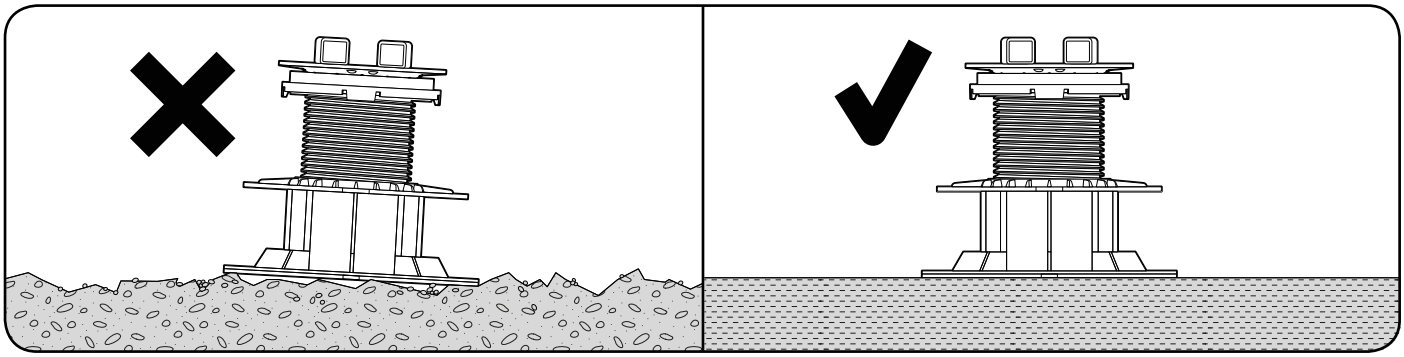

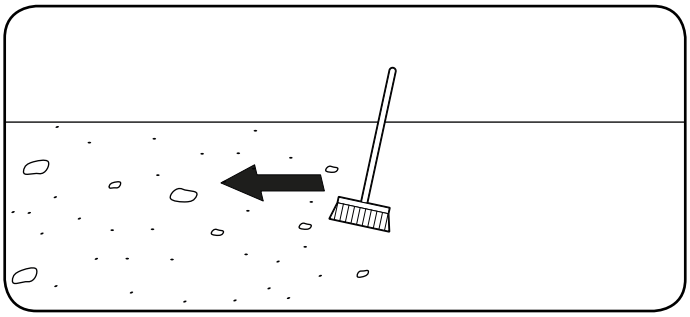

Clean surface

Before placing pedestals. Clean terrace surface from any unwanted elements.

Foundation weight loading

Pedestals can be placed on the expanded polysteryne panels etc. Remember to check foundation weight loading performance. Total area of the pedestal base is 189,5 cm2.

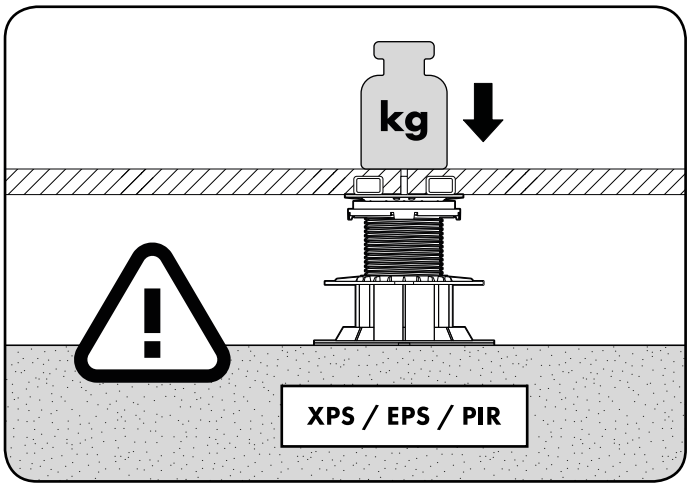

Sensitive surface protection

In case of damage of sensitive surface (water membrane etc.) please remember to use SBR Granulate Rubber pad under pedestal base.

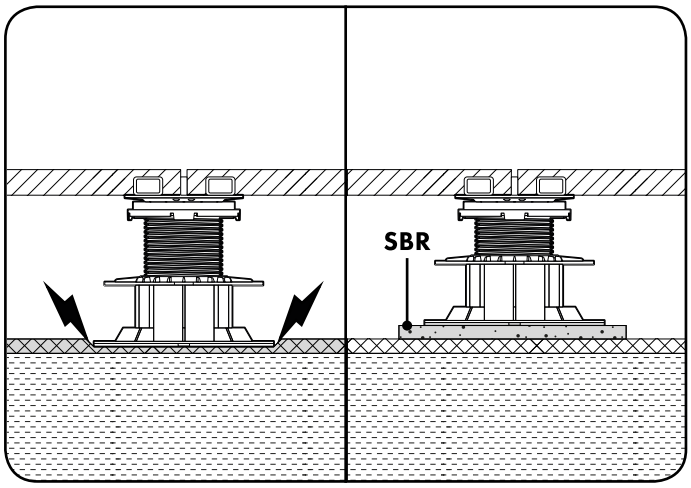

IMPORTANT INFORMATION

WATER

Pedestals under water usage

If pedestals used to stay under water please remember to empty reservoir before freezing weather conditions.

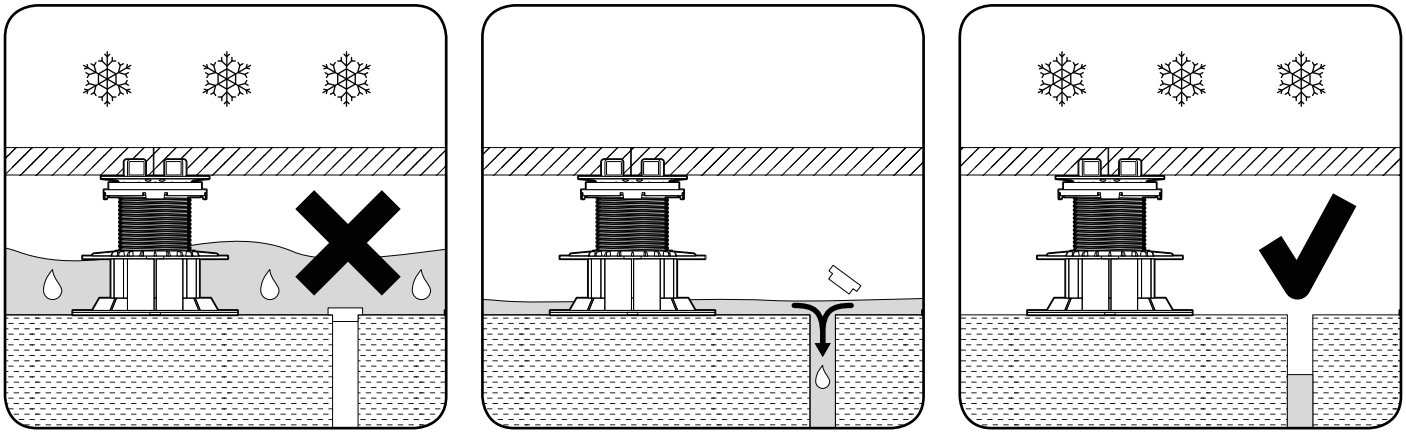

Water inside pedestals

If pedestals placed under water. Please remember to drill a hole in the lowe part of the pedestal base to allow water go out when emptying reservoir for winter freezing season.

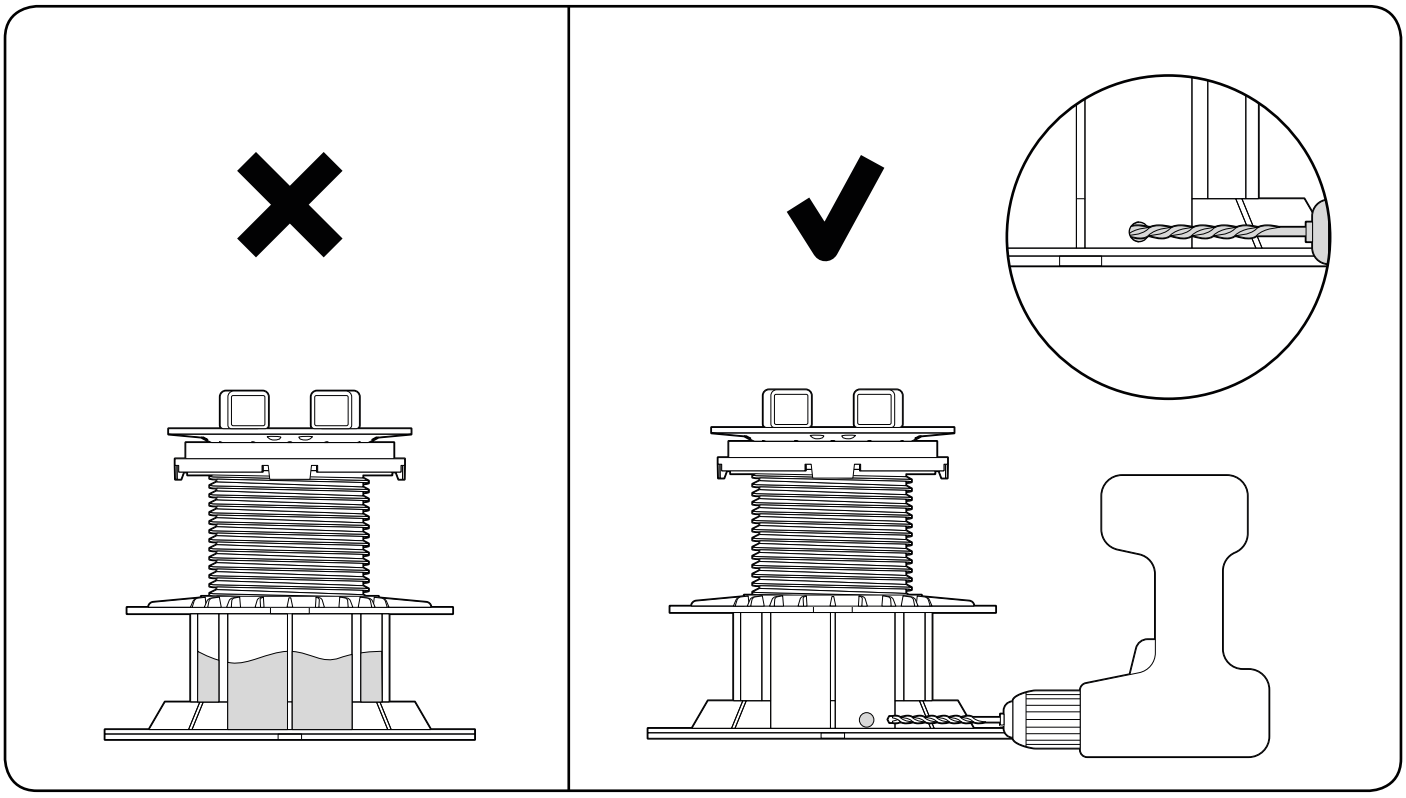

PEDESTALS LOCKING

Pedestals blocking

When pedestals height needed to be blocked screw inside the pedestal base and screw ring as on the drawing below

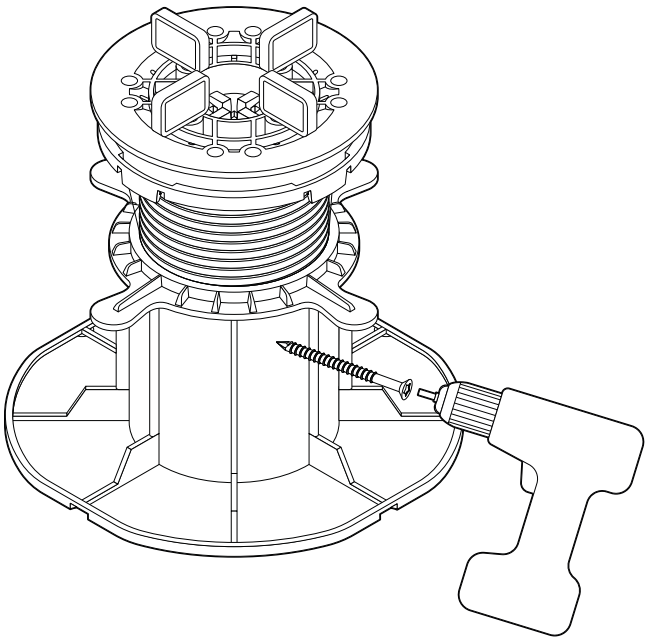

Tools:

First drill the hole and than use screw with screwdriver.

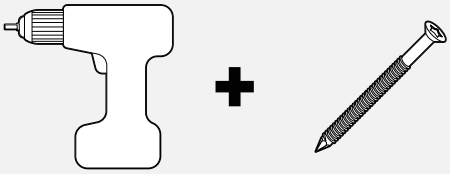

Screwdriver

Screws

Pedestal height lock

Drill inside the pedestal base, screw ring and screw than drive screw inside to lock pedestal height.

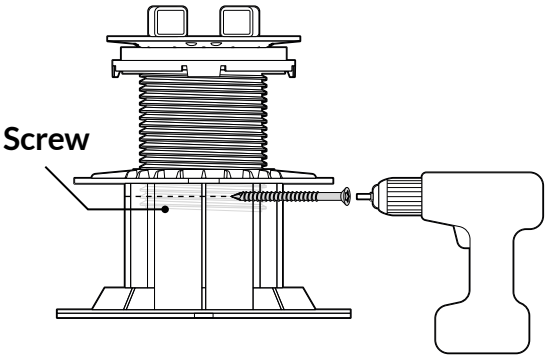

Remember to check if pedestal height is adjusted correctly before locking them.

Pedestal lock with height coupler

For additional caution when lock height of the pedestal with height coupler please remember to screw the pedestal base with height coupler also.

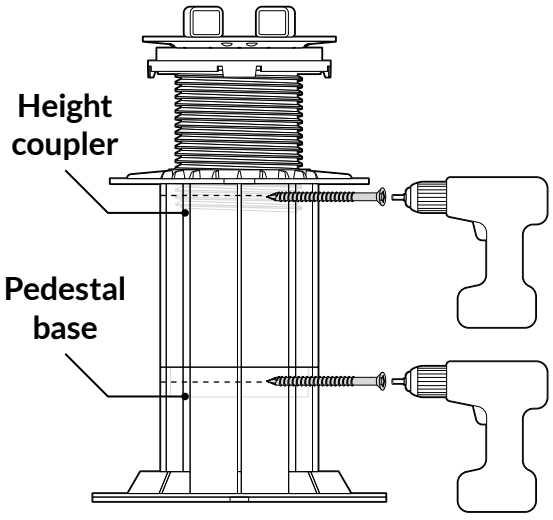

RAWL PLUGGING

Pedestal fixing to the foundation with raw plug

If there is possiblity to pedestals change position while mounted it should be fixed to the foundation. Drill hole in terrace foundation and than use raw plug to fix pedestal to basis.
Remember to verify if top layer of the terrace allows to be drilled.

Tools:

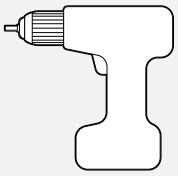
Screwdriver


Screw


Raw plug

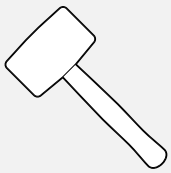
Hammer


drill bit

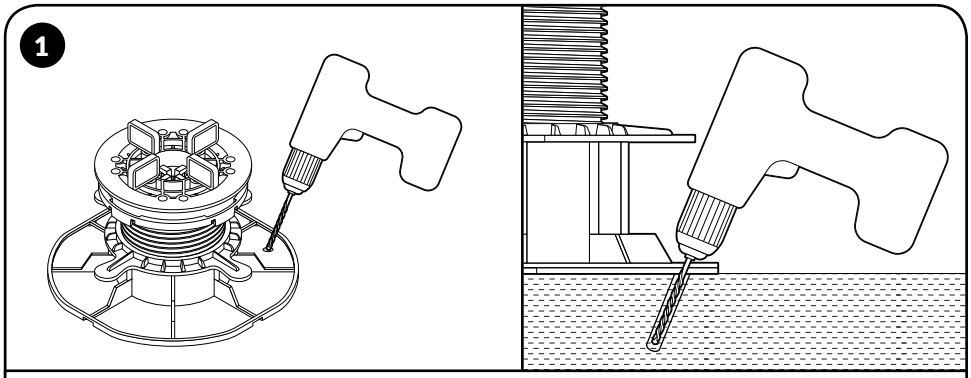

1. Drill hole in foundation with hammer drill. Drill hole with screw driver in pedestal base.

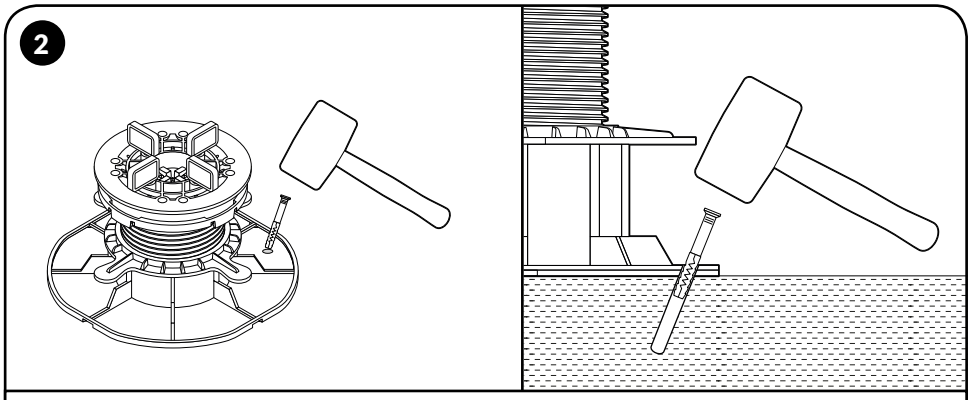

2. Hammer raw plug inside the hole.

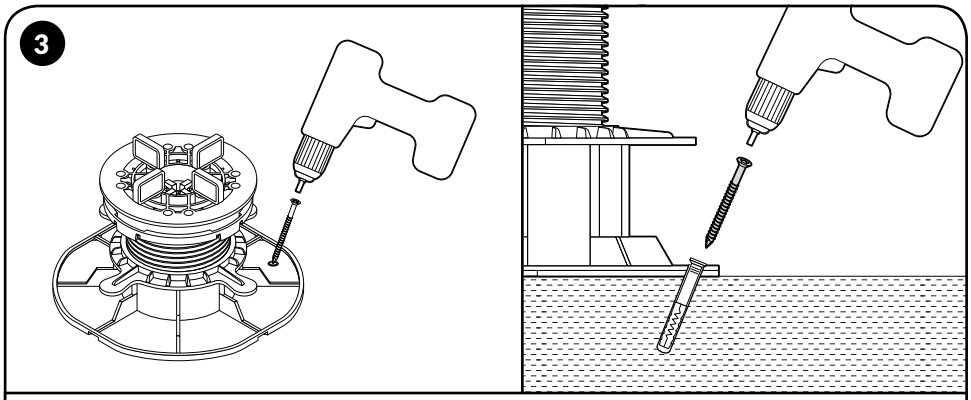

3. Screw inside the rawplug. Please remember to not screw press too much to avoid pedestal base cracking.

RAWL PLUGGING

Fixing pedestals with glue

In case there is no option to drill hole in terrace foundation You should use glue to fix pedestal to the basis.

Tools:



Pencil

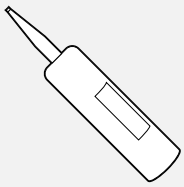

Adhesive glue 2 in 1
(polymer technology)

1

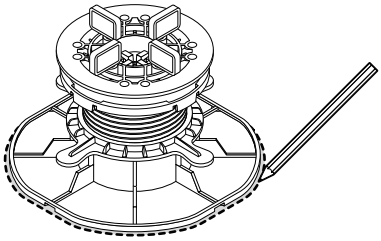

1. Draw around the pedestal position

2

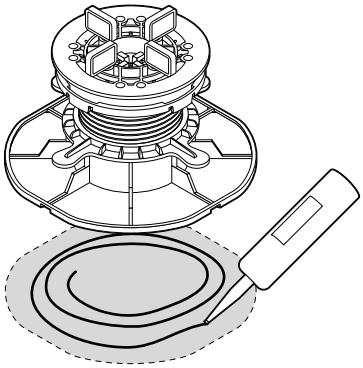

2. Use glue under pedestal.

3

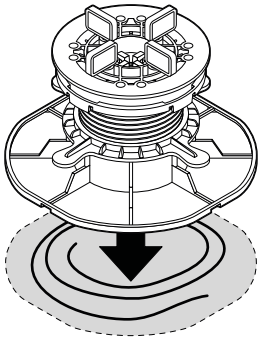

3. Stick pedestal to the glue.

4

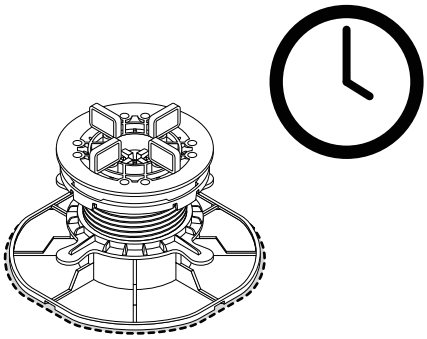

4. Note the time of glue bond.

CUTTING PEDESTALS BASE

Adjusting pedestal base geometry - along the wall

In case of pedestal must be placed next to wall its base must be cut. Cut demanded geometry with jigsaw or saw. Please note that sharp edge after cutting must be protected with SBR granulate rubber pad.

Tools:

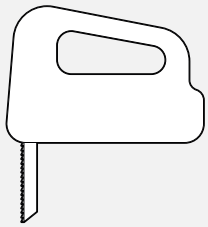

Jigsaw/Saw

1

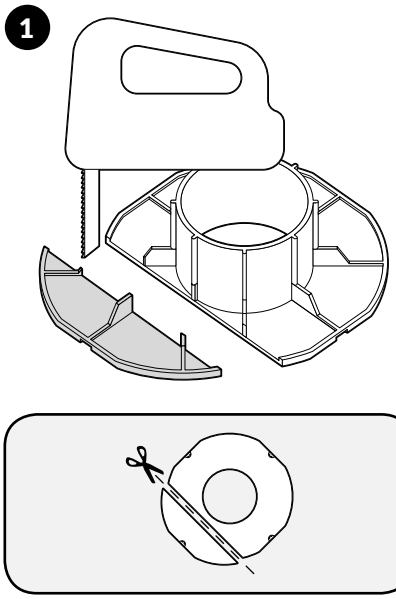

2

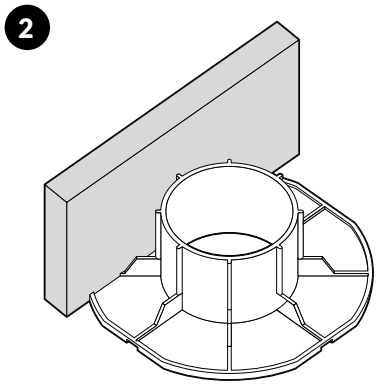

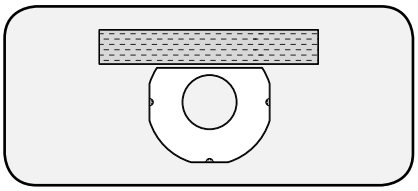

Adjusting pedestal base geometry - corner

Pedestal base geometry must be cut if pedestal must be placed in terrace corner. Please note that sharp edge after cutting must be protected with SBR granulate rubber pad.

3

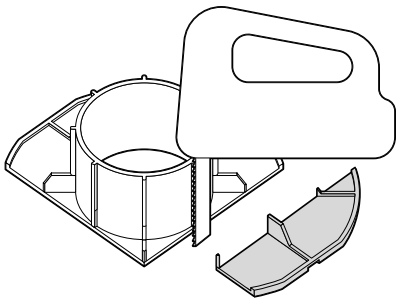

4

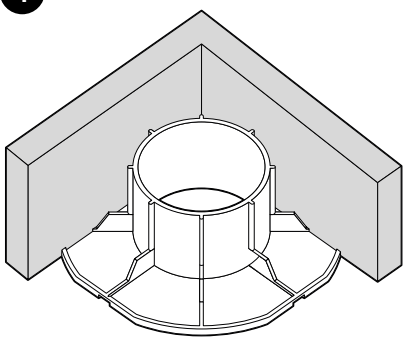

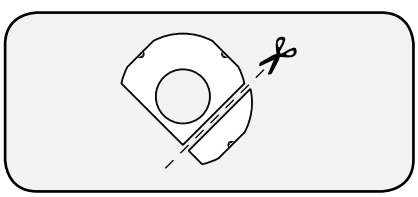

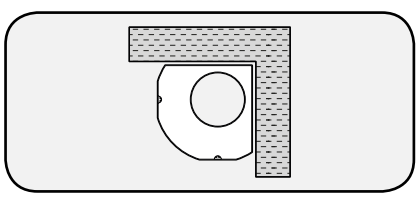

TILES CUTTING

Tools:

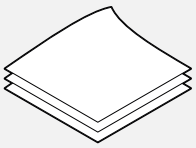

chipboard/carton

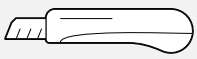

knife

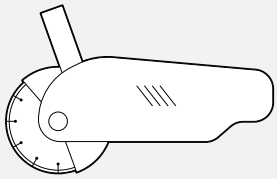

Grinder

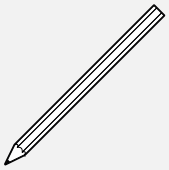

Pencil

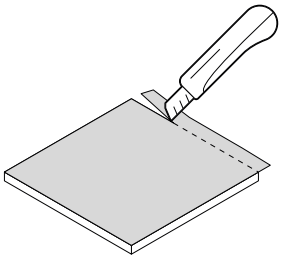

1. Cut the chipboard/ carton size adequate to tile size

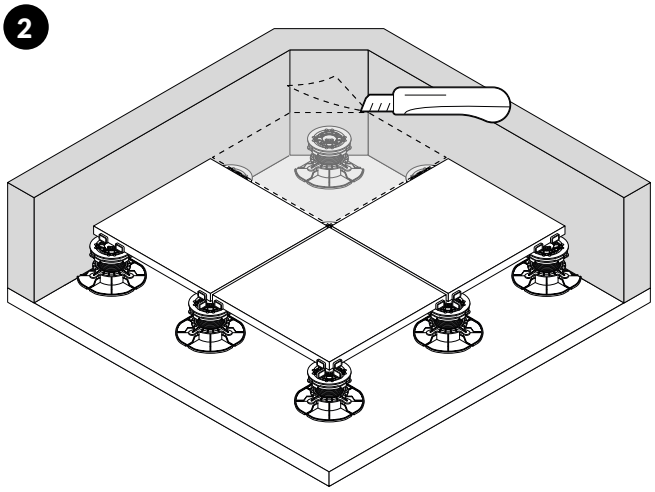

2. Apply chipboard/carton and cut the demandec size of tile

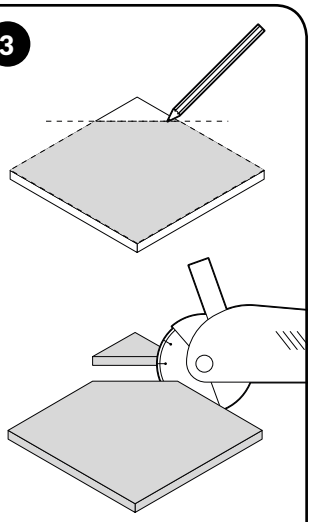

3. Overdraw the model on the tile and cut.

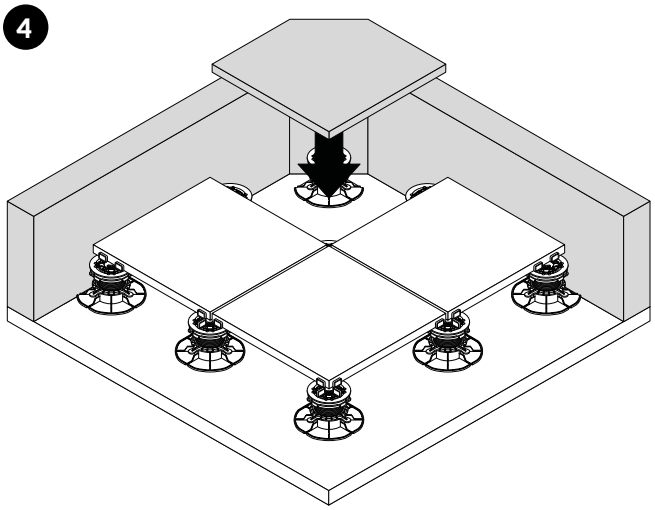

4. Place tile on the pedestal.

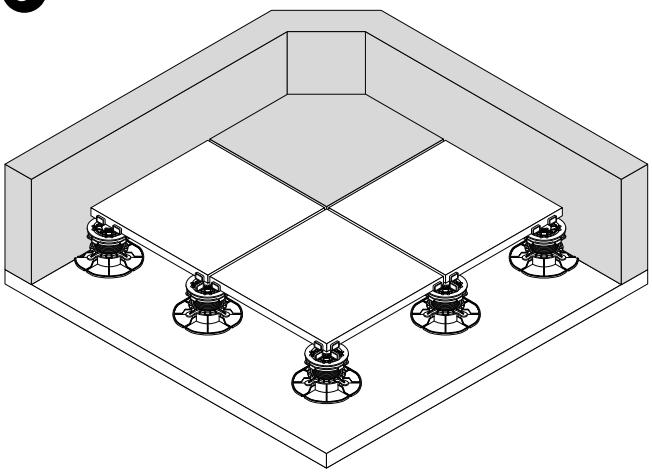

5. Check tile correct stability.

ROOF DRAING / GAPS

Roof drains and holes

If pedestal placement is in the place of roof drain or hole in the roof please make additional support as on the drawing below.

1

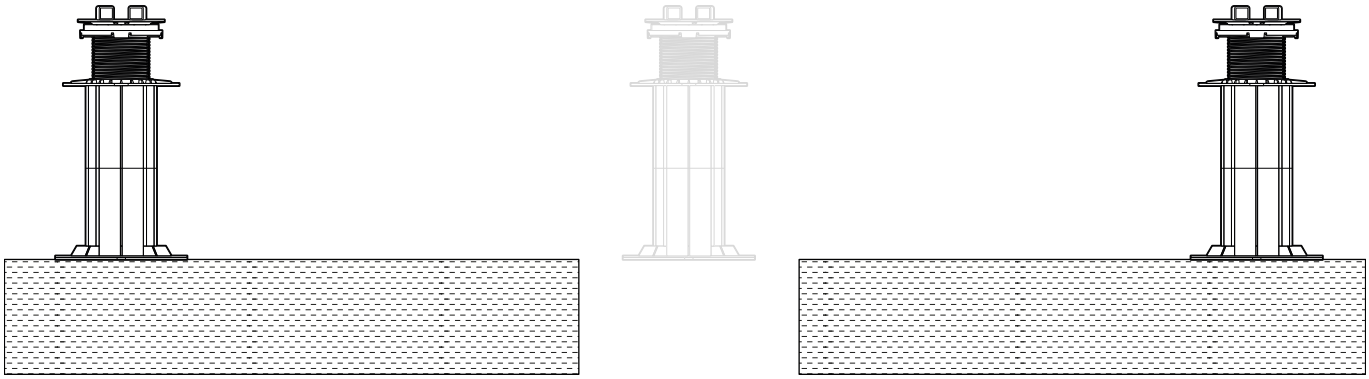

2

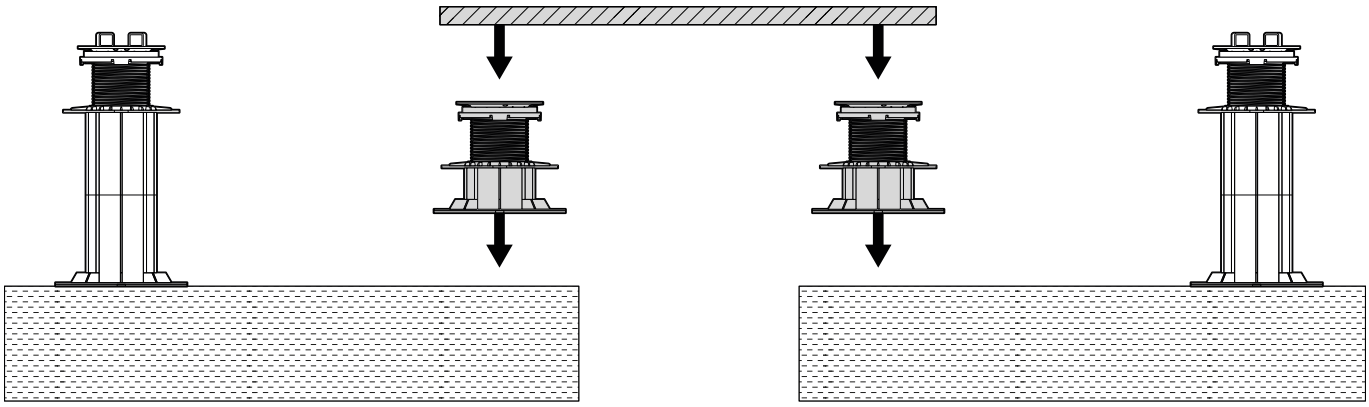

3

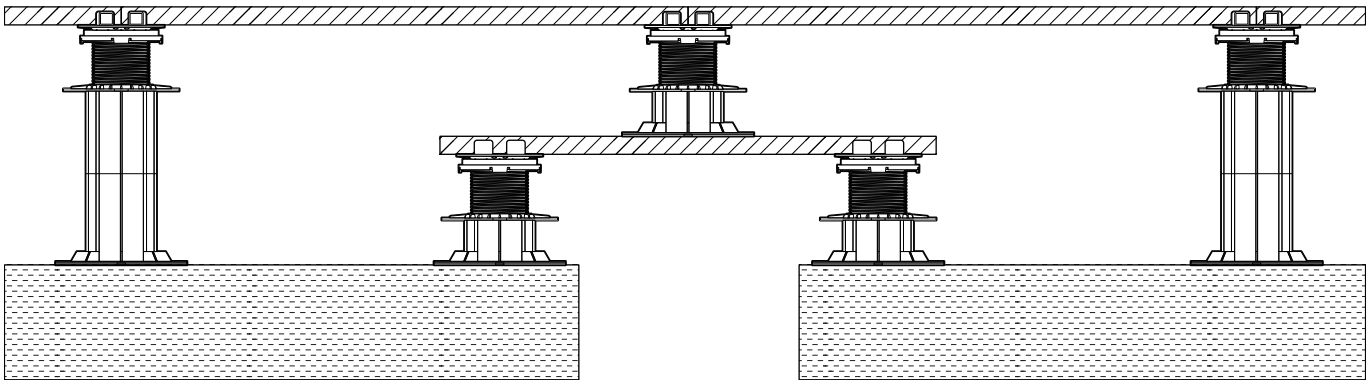

APPROPIATE PEDESTALS PLACEMENT PROJECT

Pedestals placement preparation

First of all measure best place to start terrace installation. You should avoid unneded tiles cut etc. Draw a plan where pedestals should be placed. Use twin to measure straight lines.

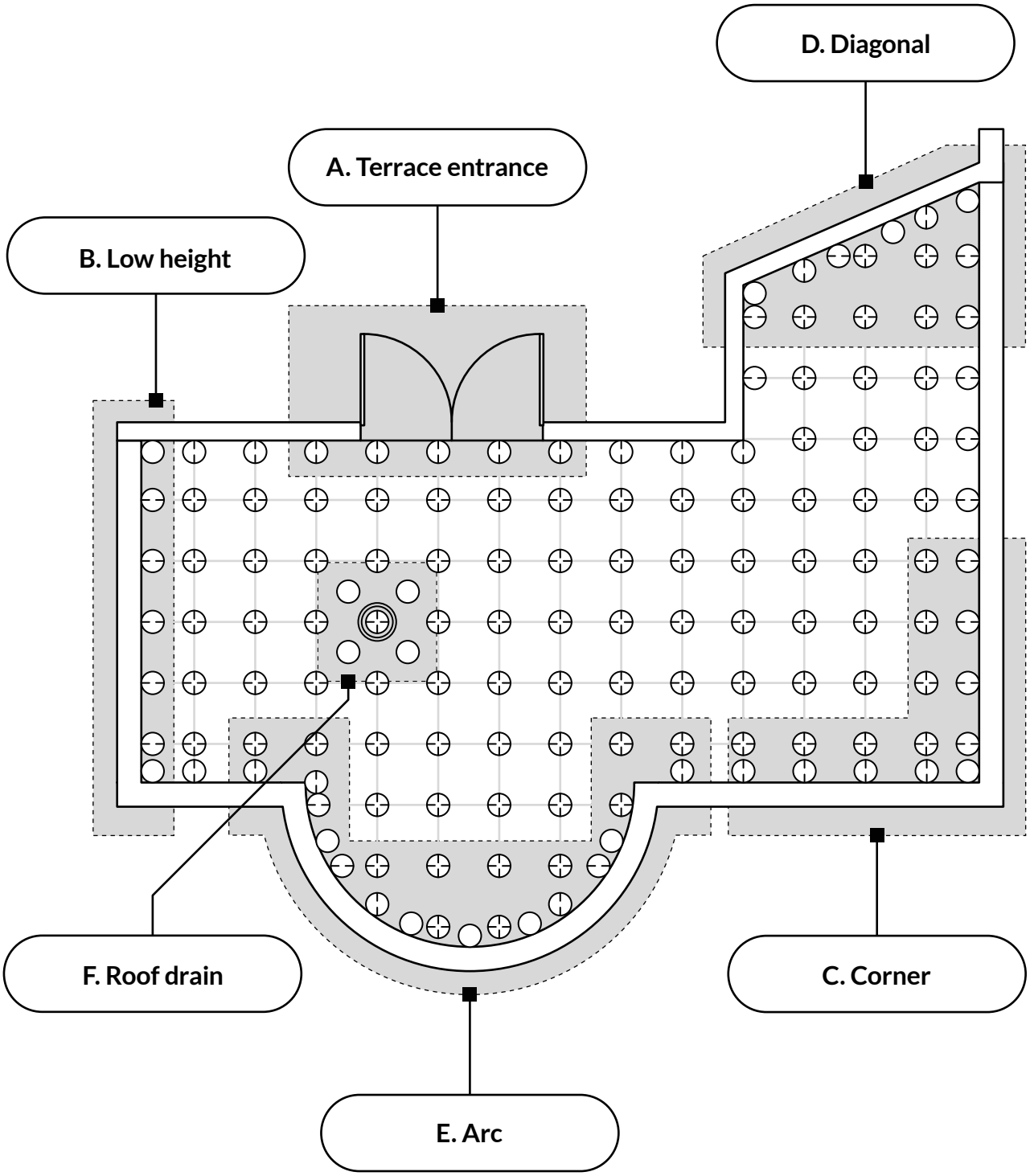

APPROPIATE PEDESTALS PLACEMENT HEIGHTS

Evaulating height of the terrace level

Correct top level of the terrace is important and decide about all other factors. Before start terrace installation check and set your terrace top level. Please remember to substract tile thickness to achieve demanded pedestal height. To check terrace level you can use laser range finder.

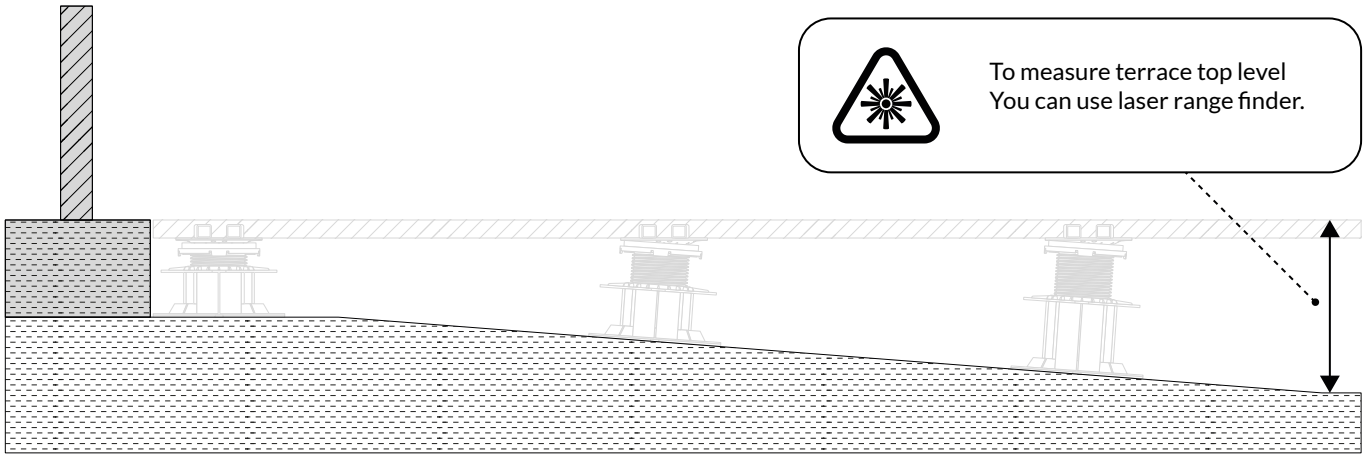

Pedestals height range

When calculating pedesals height remember to see it height working ranges.

Different fixed heights

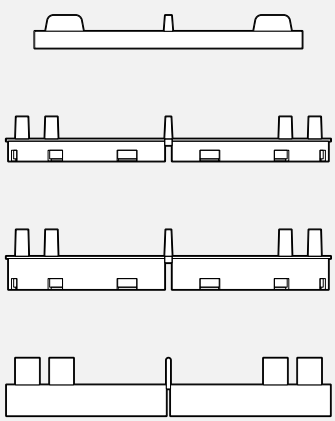

4 standard pedestals heights

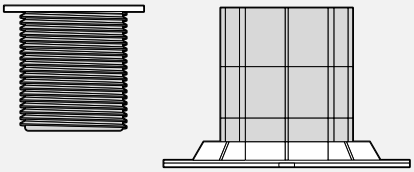

Fixed support pads stacking

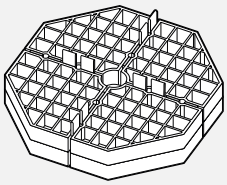

Pedestal height regulation

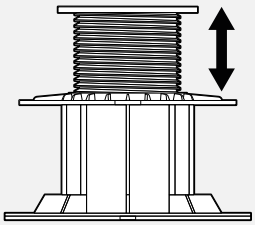

Height couplers

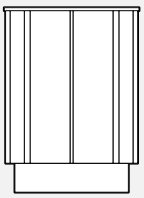

APPROPIATE PEDESTALS PLACEMENT

START INSTALLATION

Set start point

First line of the tiles lay along the longest wall if possible. The best is row without cutting tiles need. Next mount perpendicular row in the longest possible line. Next step fill all te terrace with full tiles. In the end fill places where tiles needed to be cut.

1

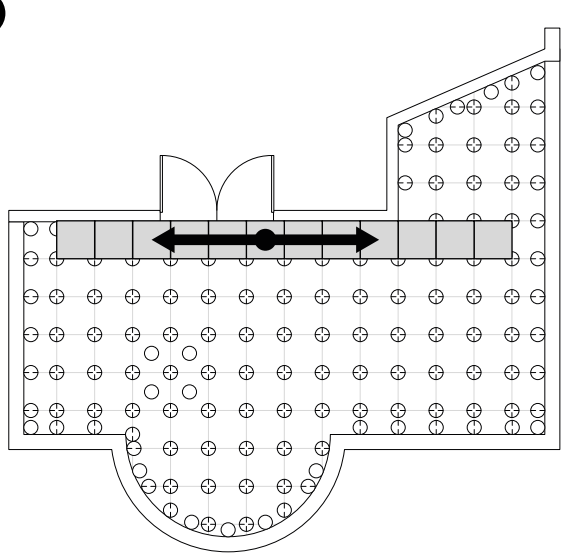

2

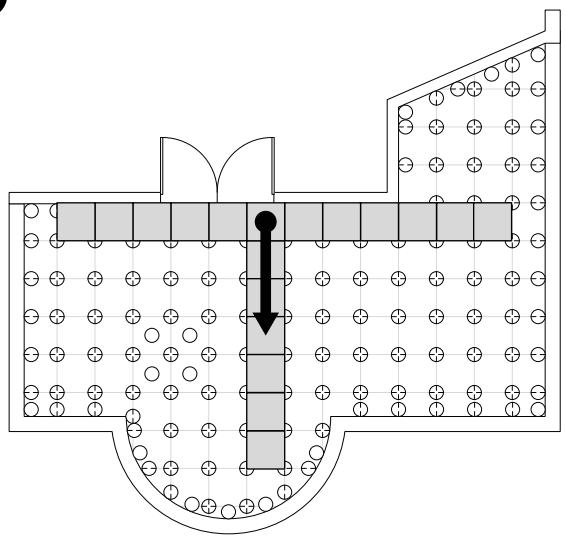

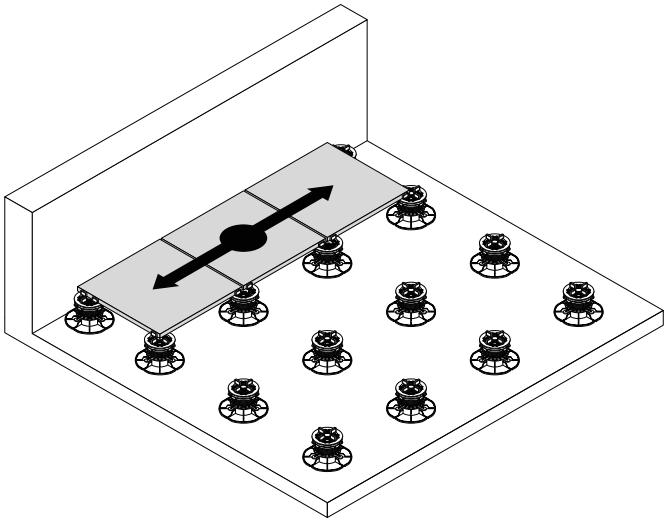

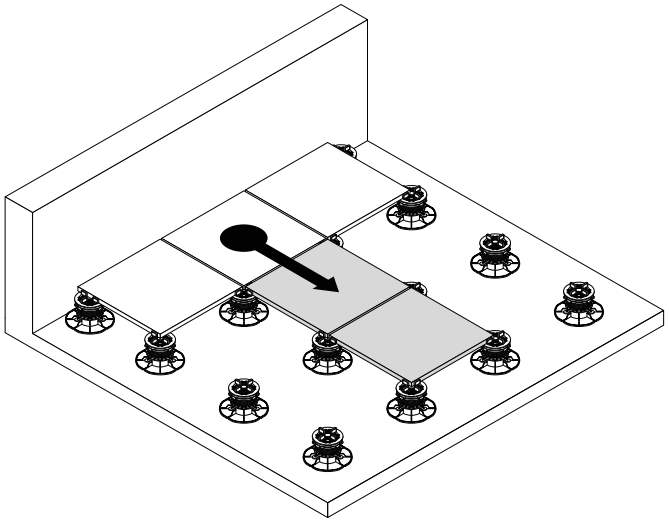

APPROPIATE PEDESTALS PLACEMENT

A. ENTRANCE ON THE TERRACE

Evaulating height of the terrace level

Terrace entrance is mostly the place where you set final top terrace level. Correct height makes terrace easy and comfortable to enter. We recommend that difference between entrance level and top terrace level should not be higher than normal stair height.

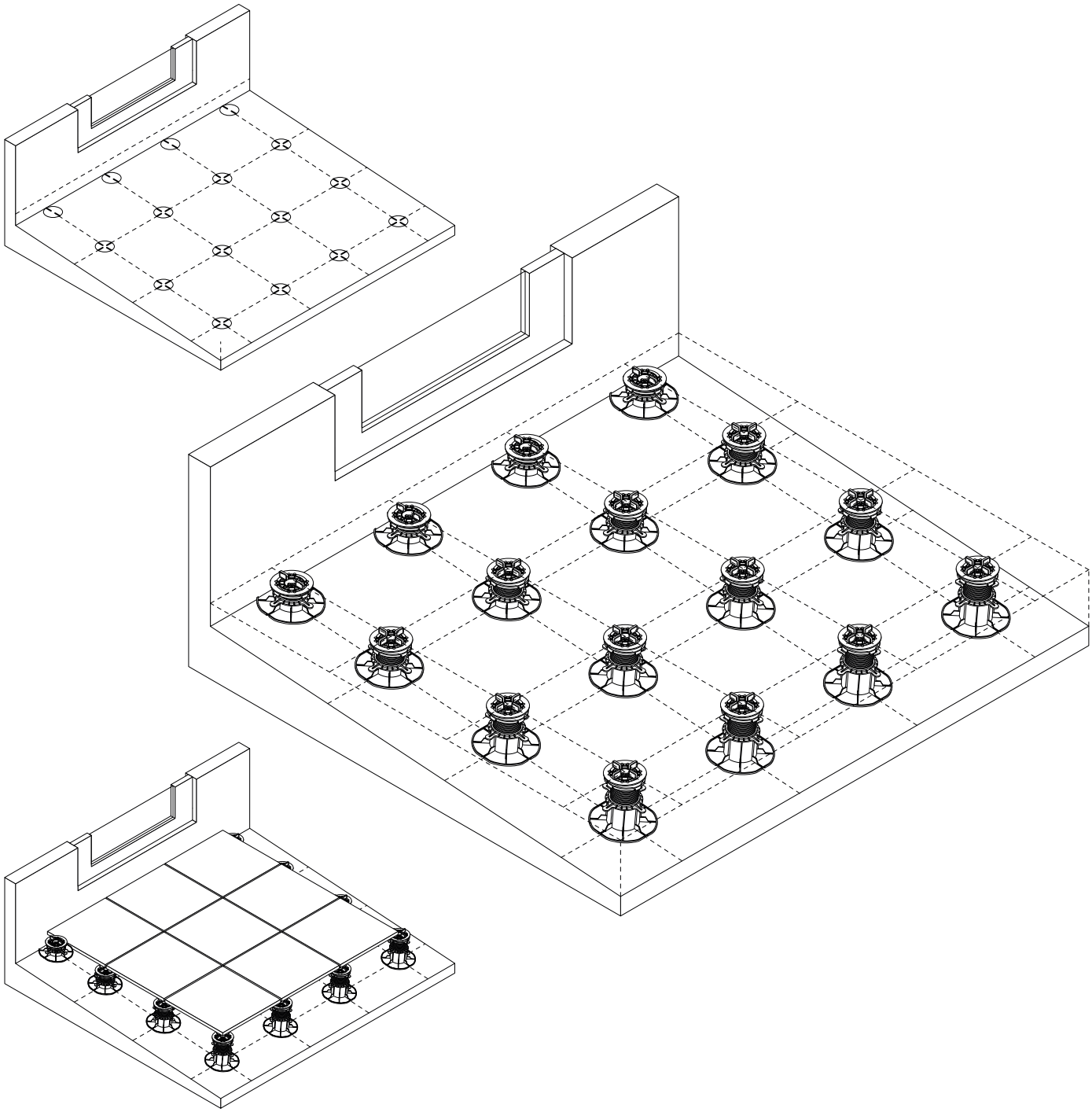

APPROPIATE PEDESTALS PLACEMENT

B. LOW CAVITY

Low height

Sometimes ventilated terrace needed to start its leveling from zero level. Start terrace levelling from lowest fixed height support 8 mm or universal SBR rubber pads 100x100 mm. We provide it in multiple thickness 3, 5, 8, 10 mm. Remember to use adhesive glue to fix rubber pads and plastic pedestals.

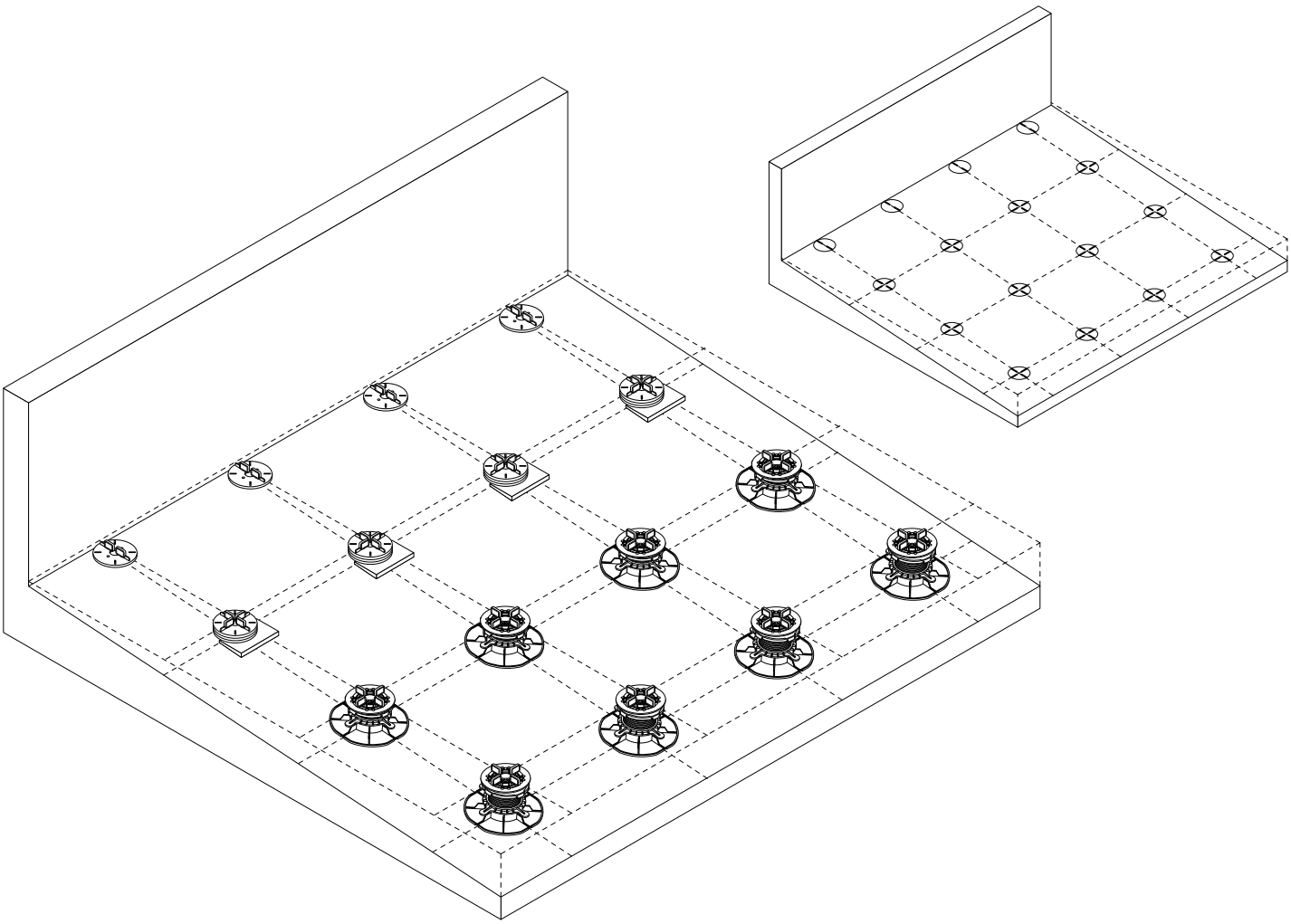

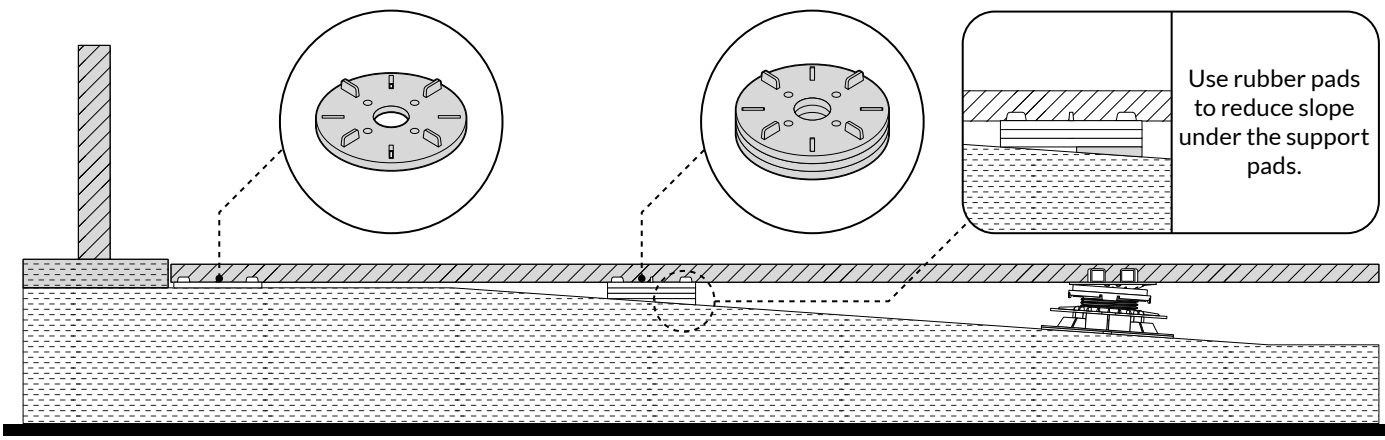

APPROPIATE PEDESTALS PLACEMENT

C. CORNERS

Pedestals placement in corner

Terrace corners need to use pedestal with base geometry cut. Place pedestal with pedestal cut as shown on the 42 page. If pedestals are to o close each other cust base as needed to place pedestal in place.

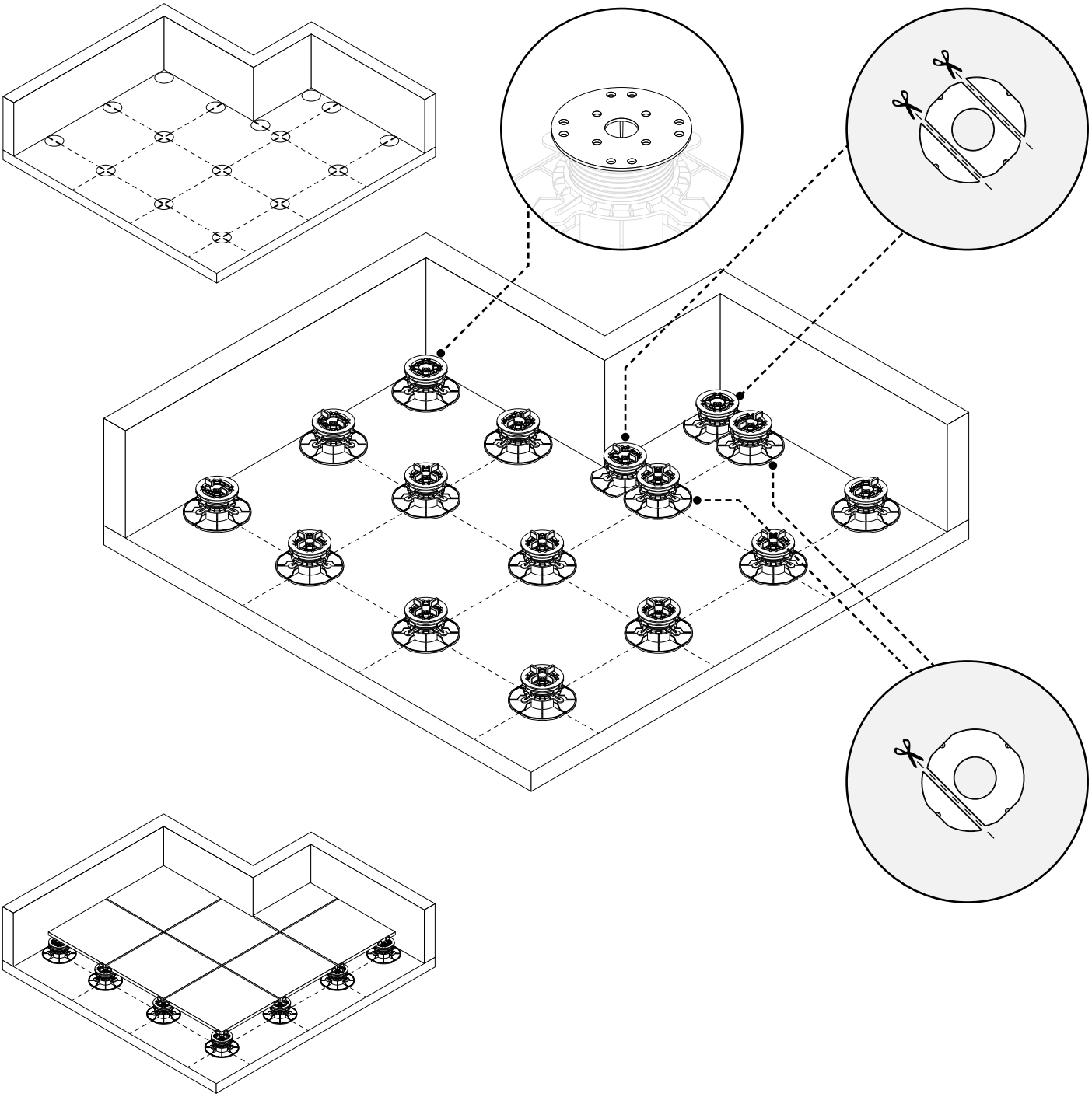

APPROPIATE PEDESTALS PLACEMENT

D. DIAGONAL

Pedestals condensation and cutting

Diagonal lines on the terrace needed to cut terrace tiles in trapeze / triangle. Pedesatls in this place are placed customizably.
The small cuts should be avoided. You can do it by measuring the tiles cut size before terrace installation.

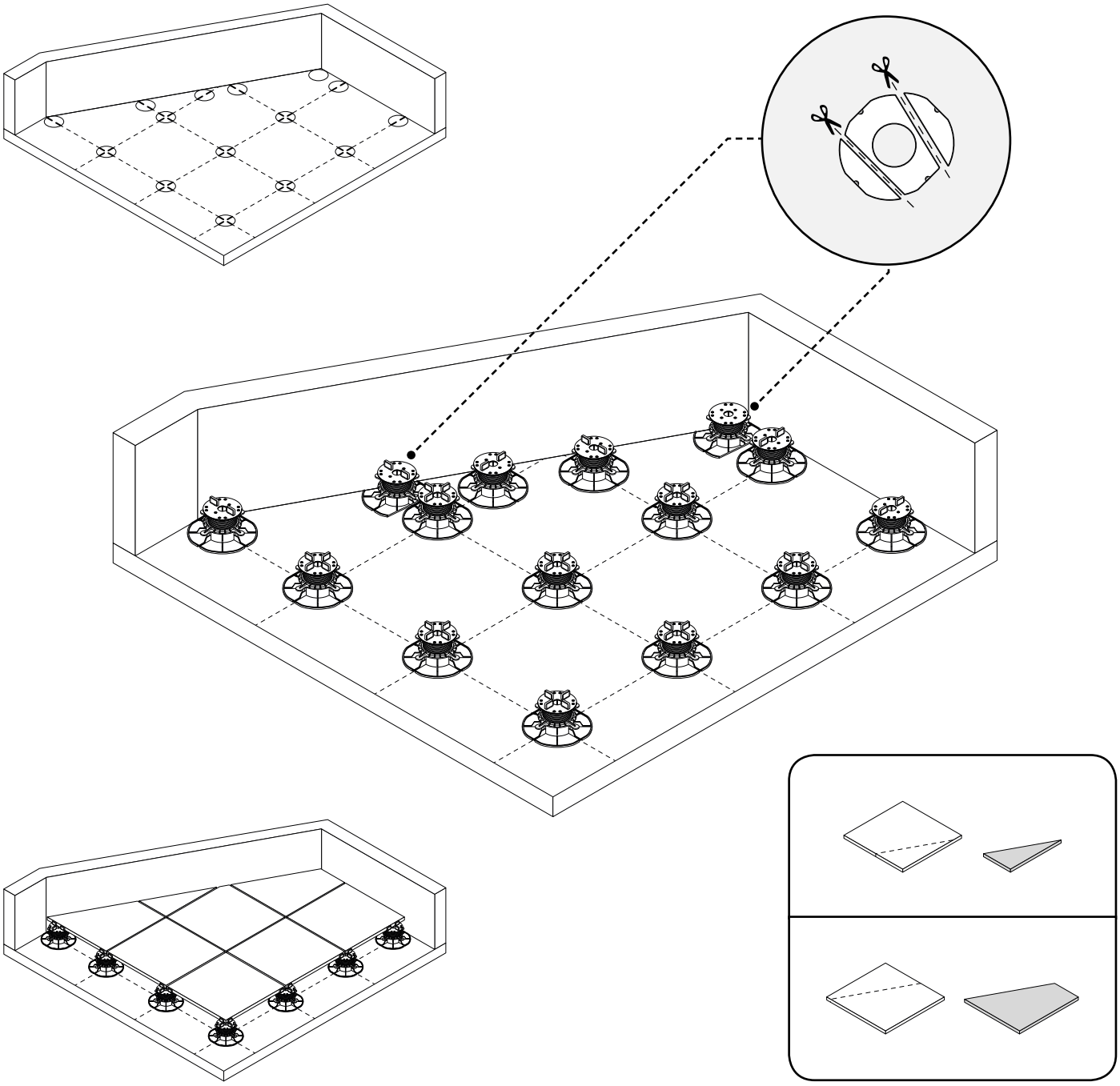

APPROPIATE PEDESTALS PLACEMENT

E. ARC

Cutting pedestals and tiles

Each terrace has its unique geometry. Often terraces has arc outer wall. In this case pedesatls placement will be customized and cutting tiles will need high accuracy. The small cuts should be avoided. You can do it by measuring the tiles cut size before terrace installation.

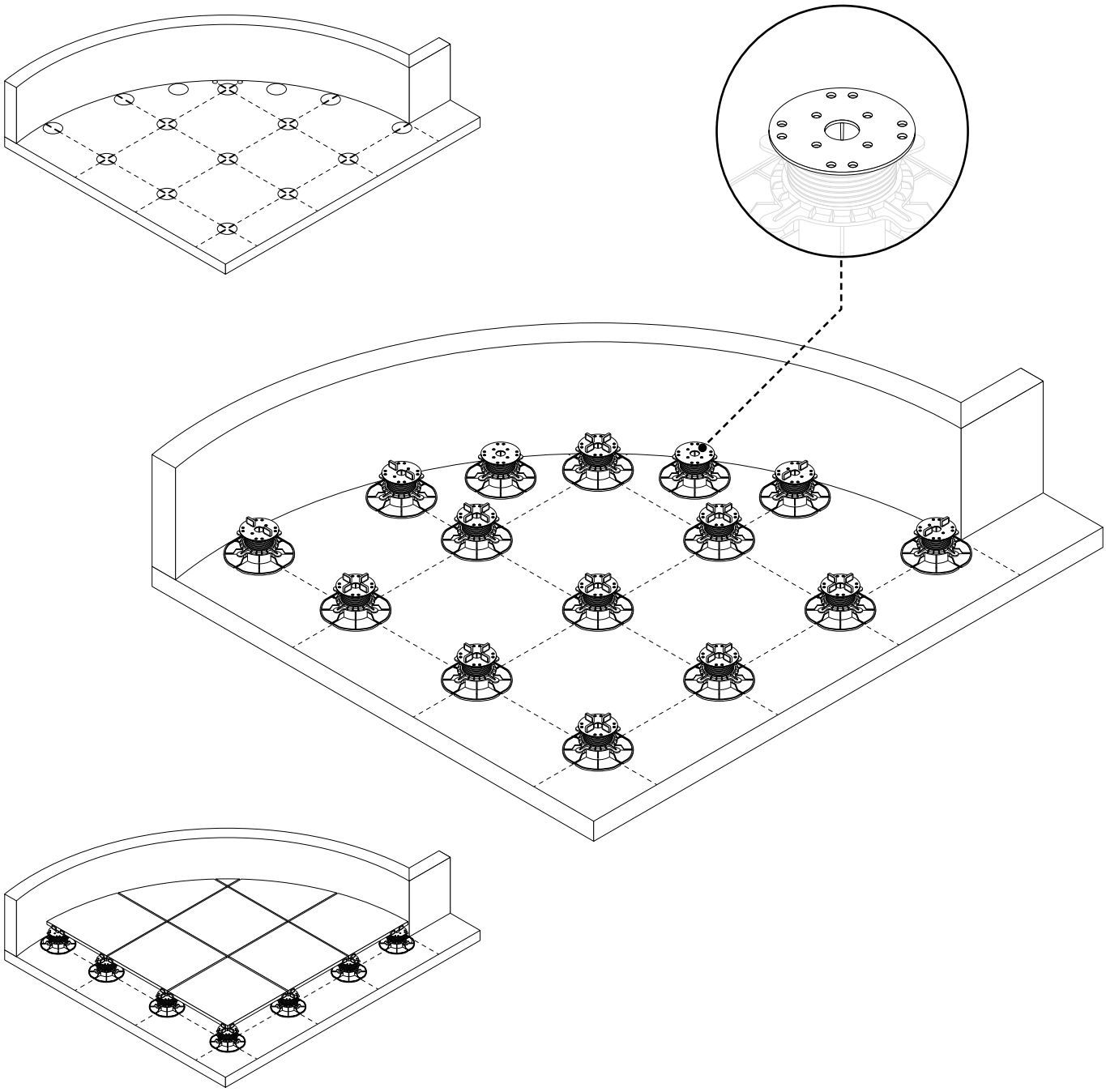

APPROPIATE PEDESTALS PLACEMENT

F. ROOF DRAIN

Assembling additional support

Sometimes pedestal placement is on the roof drain or hole. In this case You cannot place pedestal in this place. Below drawing shows hot to make additional support in this case to avoice this limitation.

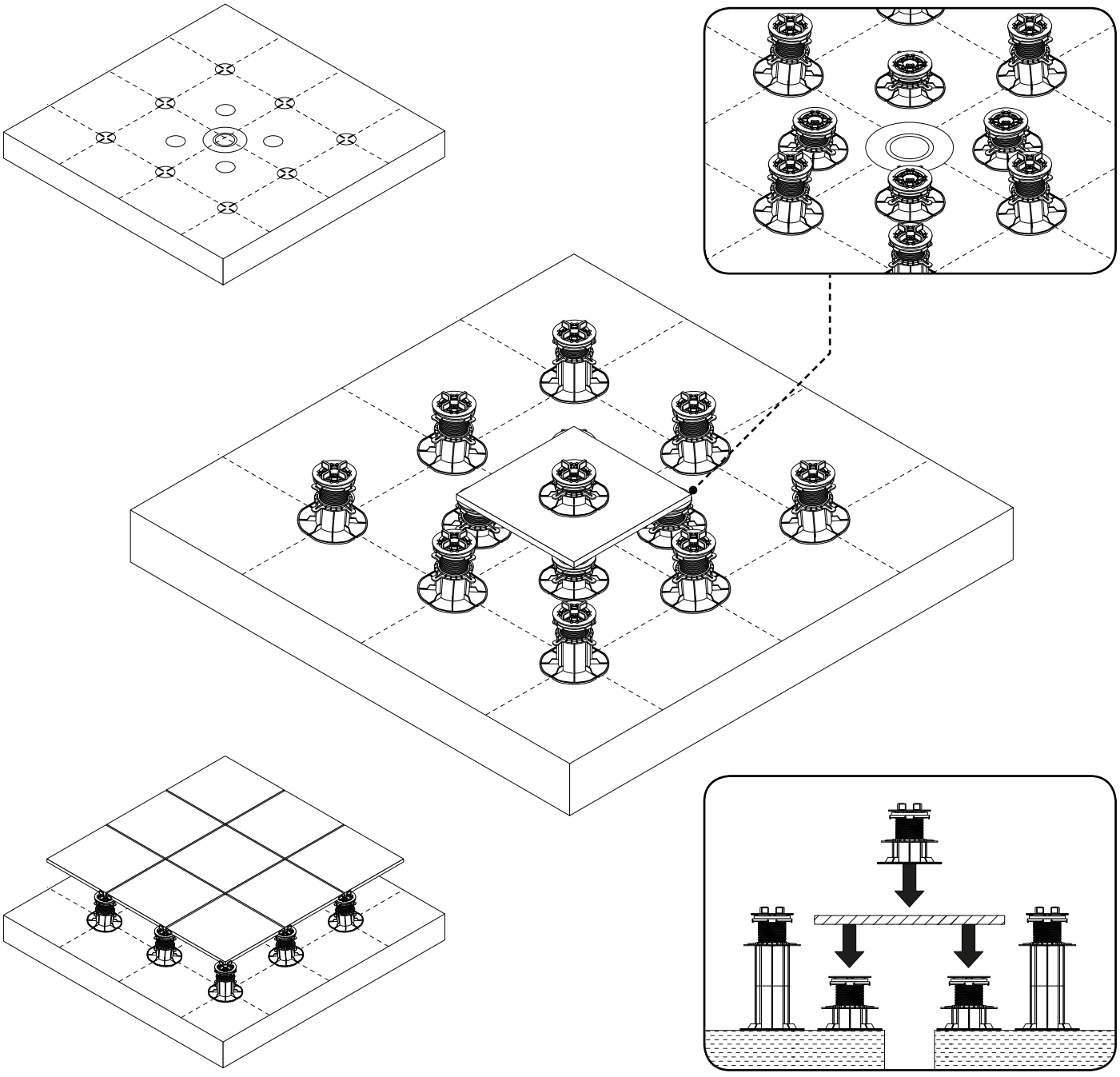

JOISTS INSTALLATION

1. Joist arrangement

Make a drawing of pedestals placement and joist arrangement. Note that distance between pedestals should not exceed more than ~50 cm. Specific dimension depend on cross section size and material of the joist and total terrace weight.

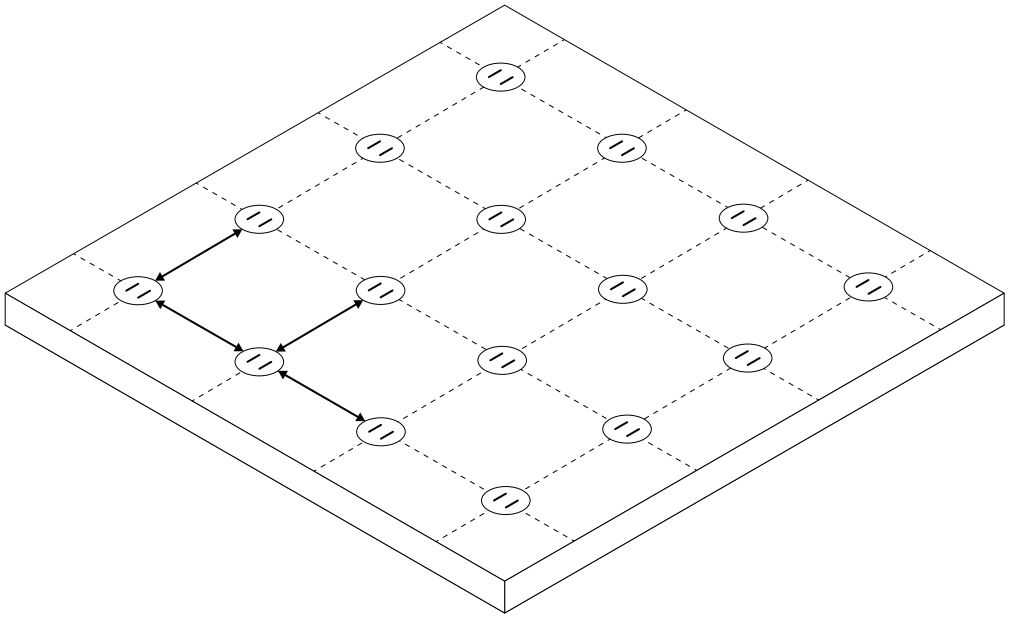

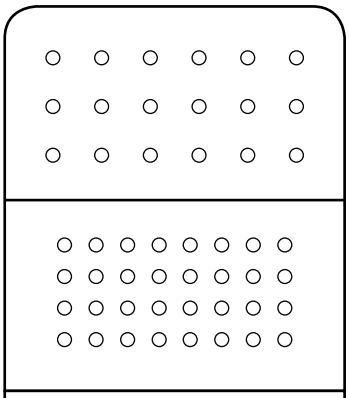

More pedestals use when You have thin joist made of soft material and terrace foundation is made of sensitive material. Fewer pedestal You can use when joist cross section is big and its made of hard material.

2. Pedestals placement

Prepare pedestals with gap spacer placed on head diagonally (drawing below) or joist adapter. Place pedestals in correct position. Level pedestals to demanded level. Place on the top of the pedestals terrace joist.

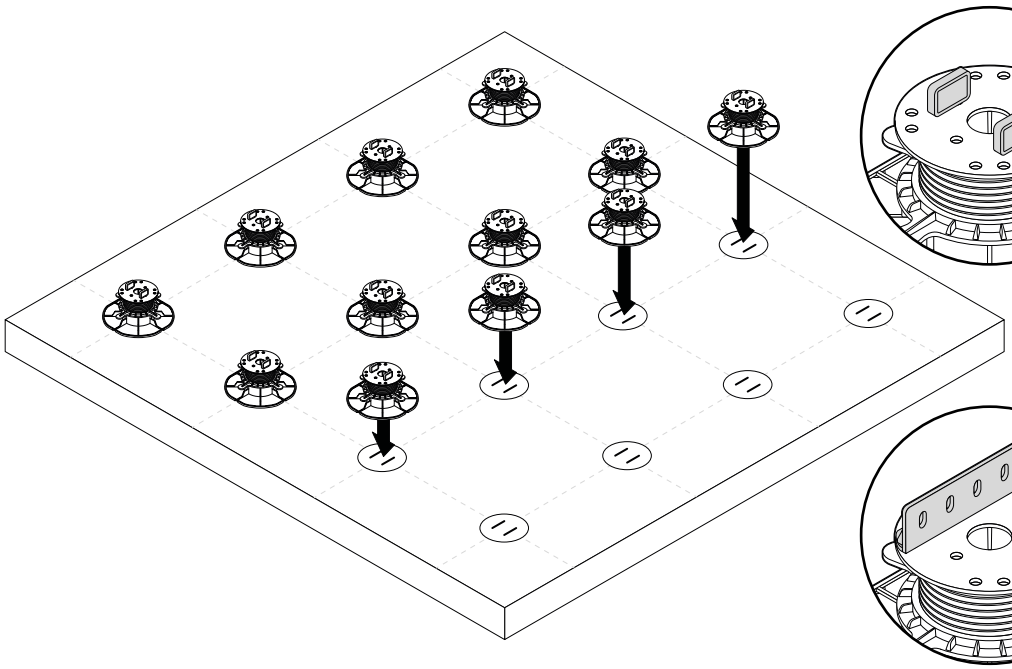

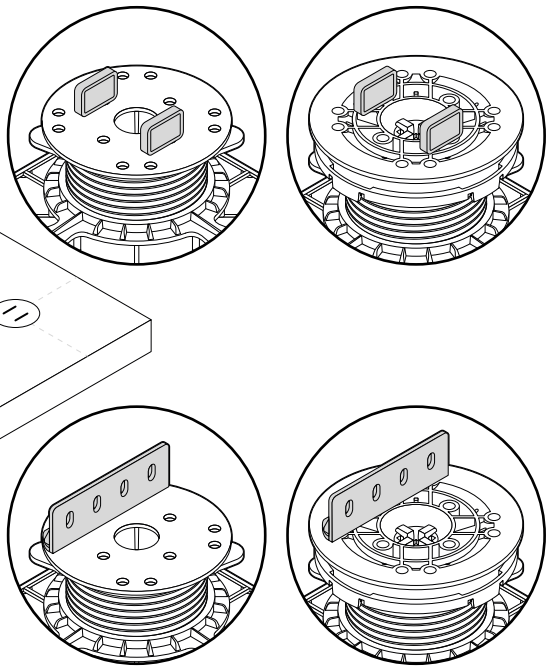

JOISTS INSTALLATION

3A. Joists leveling - gap spacer version

Place joists on the top of the pedestals. By turning screw ring adjust pedestal height to demanded level.

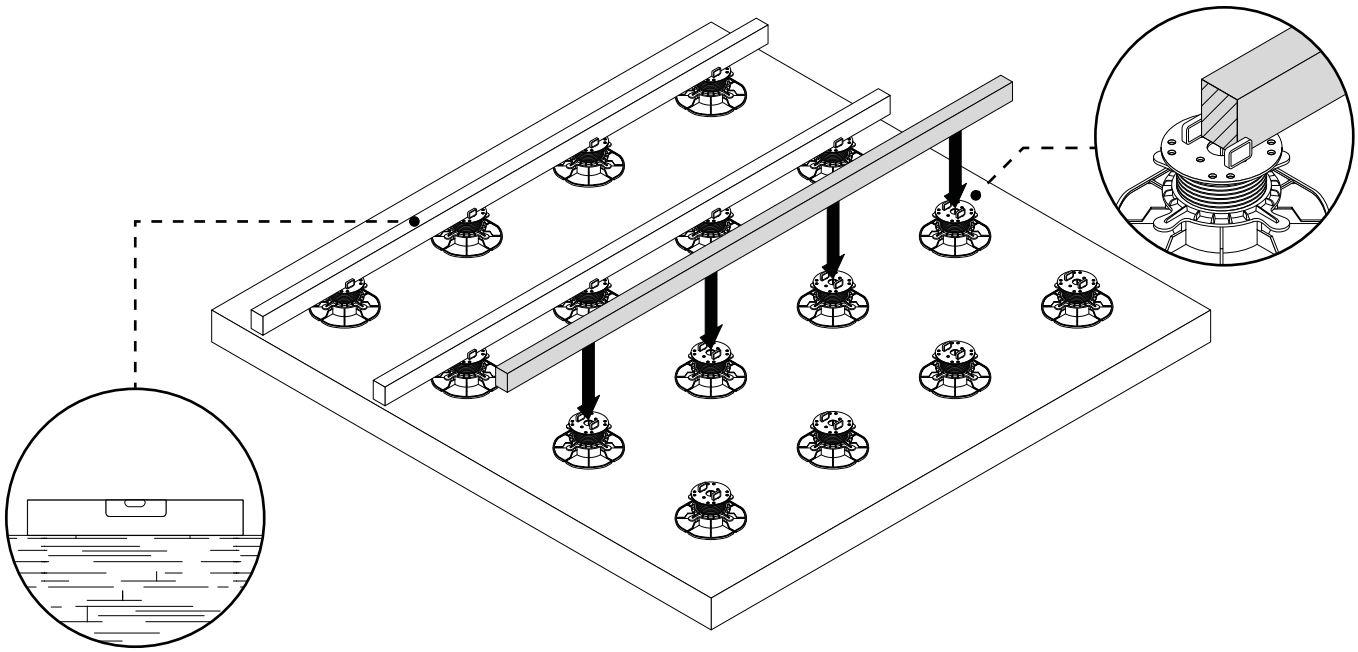

3B. Joists leveling - joist adapter version

Place joists on the top of the pedestals. By turning screw ring adjust pedestal height to demanded level. Use screws to fasten the joist to the adapter.

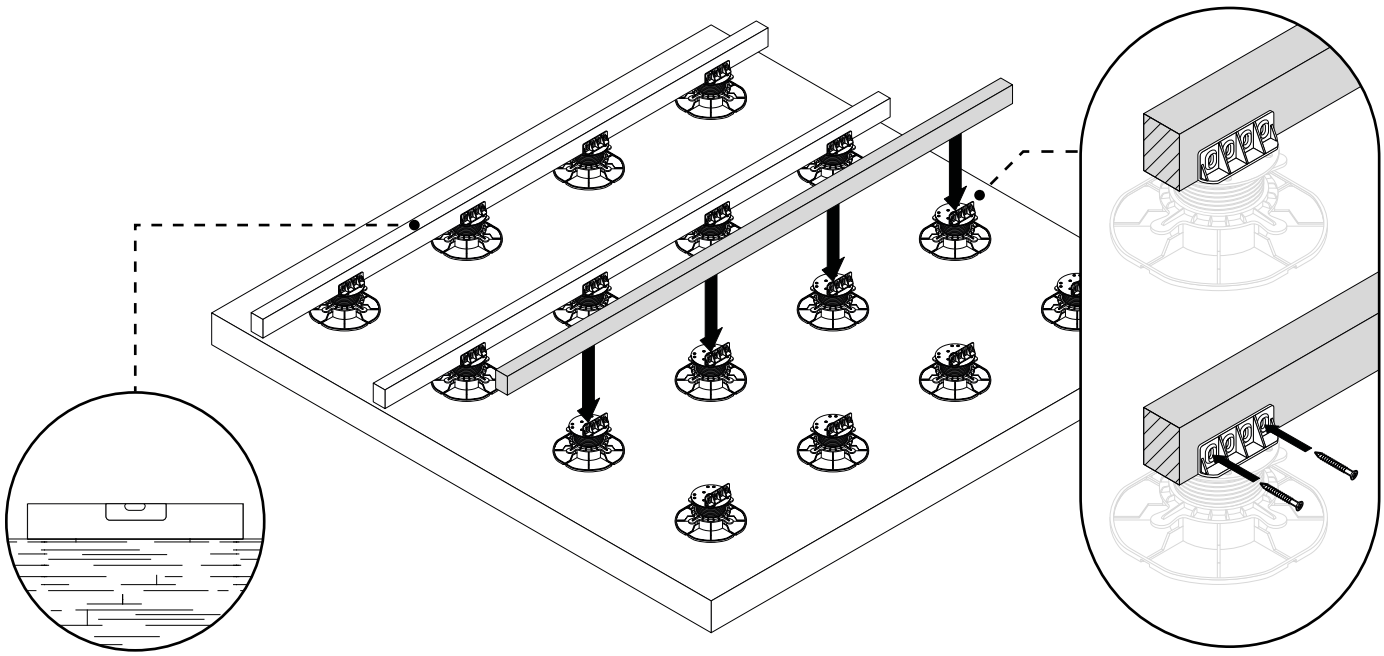

JOISTS INSTALLATION

4. Decking planks installation

Mount decking planks on the levelled joists.

A

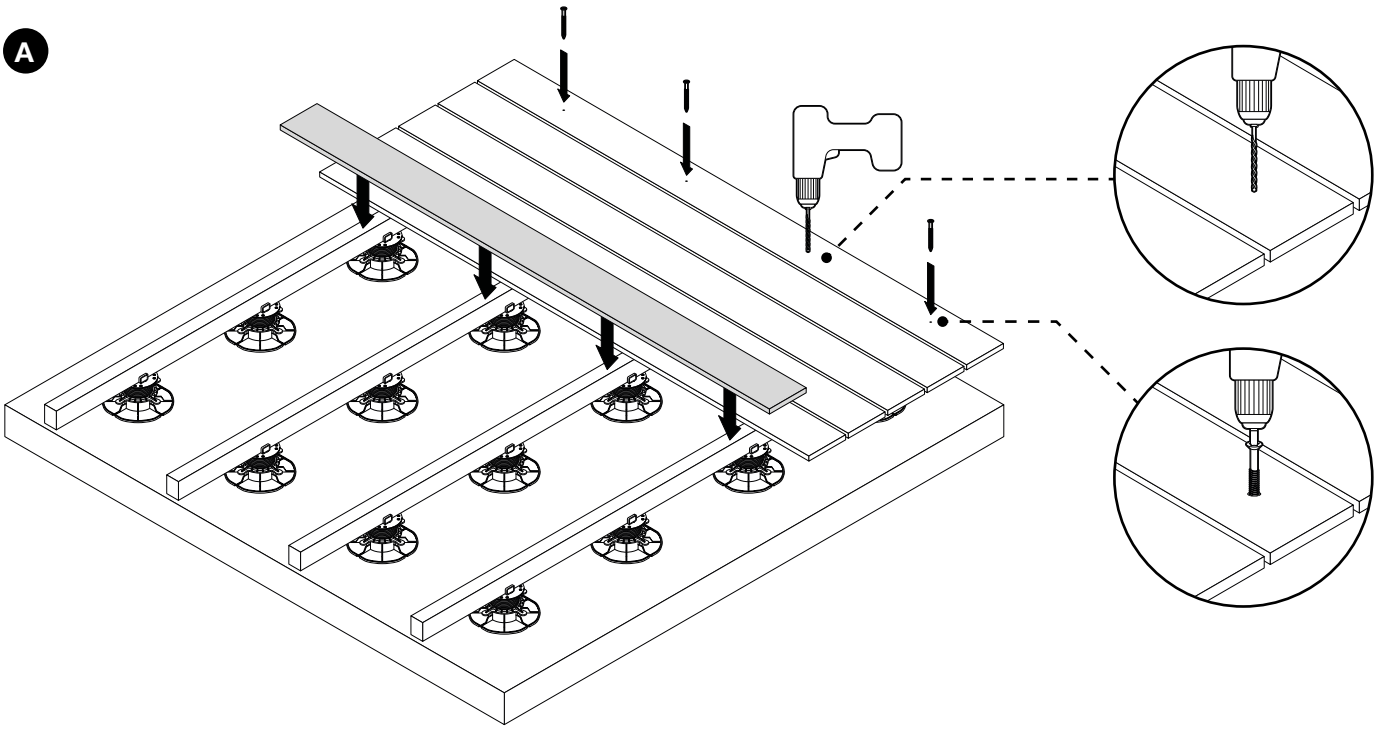

B

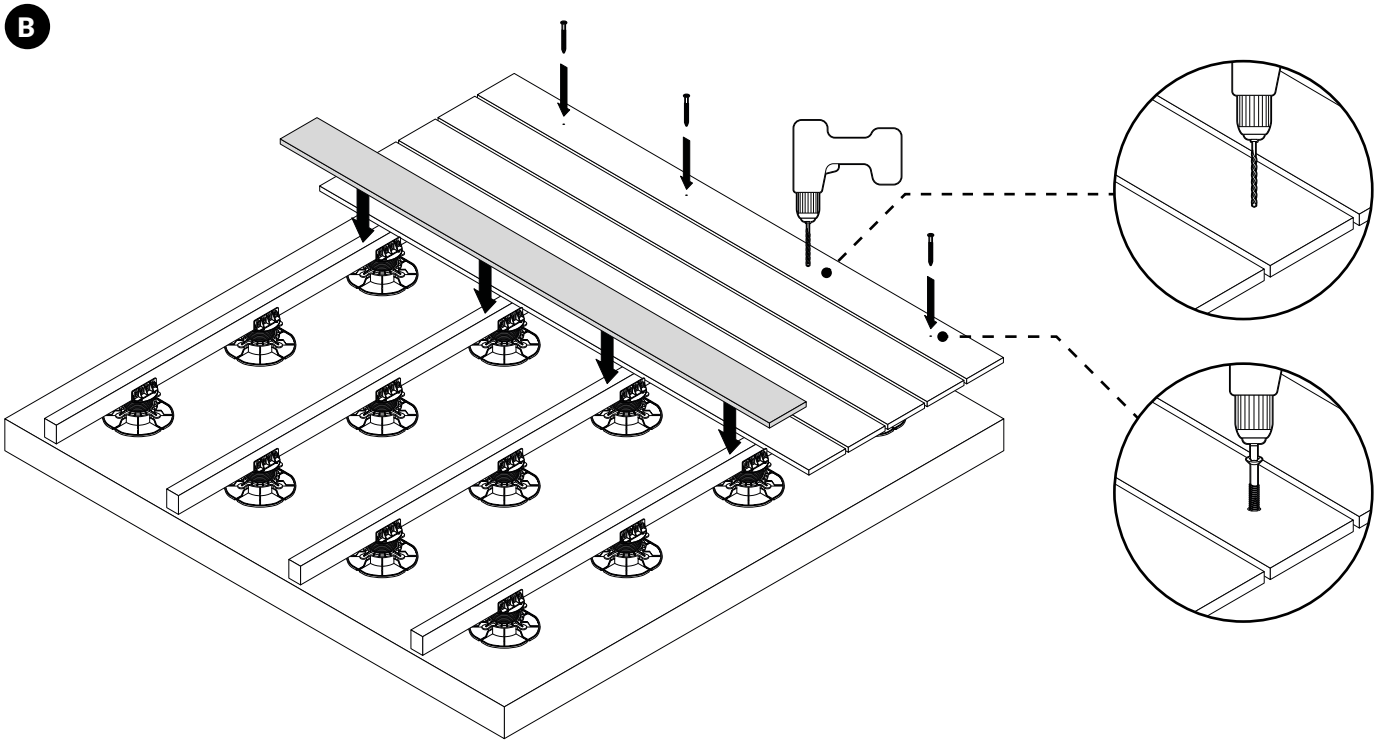

X

x

xxx

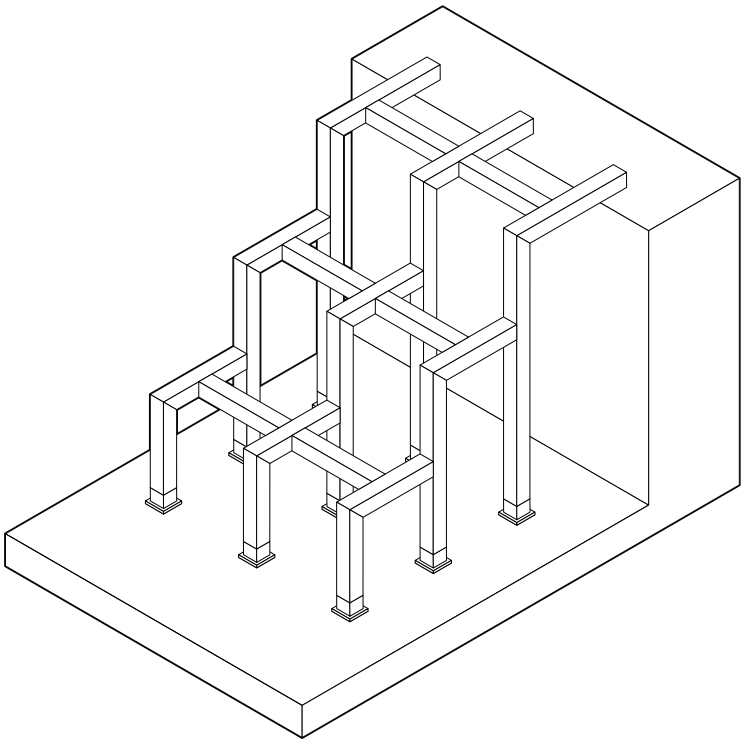

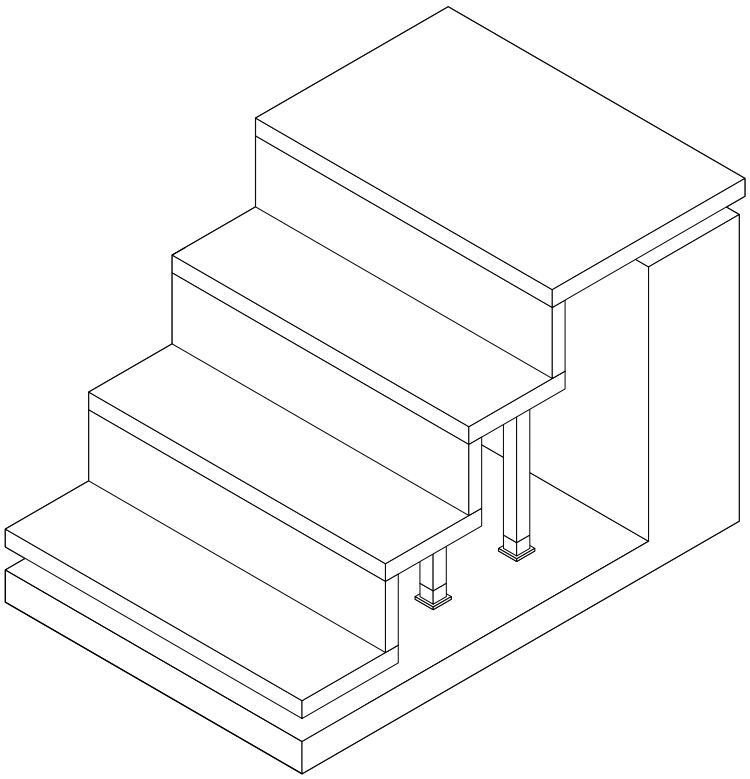


enviro
lift